Newton City Council Agenda

August 5, 2024 - 6:00 PM

View the City Council Meeting:

In Person	**Television**	**Online**
City Hall - Council Chambers 101 W 4th St S, Newton, IA 50208	Mediacom Channel 12/85/121.12	newtongov.org/cablecast

Pledge

Pledge of Allegiance

Call to Order

1. Roll Call

Citizen Participation

2. This is the time of the meeting that a citizen may address the Council. After being recognized by the presiding officer, each person will be given three (3) minutes to speak. Elected officials will take comments into consideration; however, this time is not intended for a discussion or entering into a dialogue. Elected officials and City staff will not answer questions or debate a citizen during the *Citizen Participation* portion of the meeting

Consent Agenda

3. July 15, 2024 Regular City Council Meeting Minutes
4. Approve Liquor Licenses for the following: Izaak Walton League, W 2nd St N, Special Class C Retail License for Special Event on September 6, 2024; Walgreens #05942 - LE0002171, 1204 1st Ave E, Class E Retail Alcohol License, Ownership Change; Newton Lodge #1270, B.P.O. Elks - LF0000274, 111 E 2nd St S, Class F Retail Alcohol License; PB Pub - LC0045655, 113 1st Ave E, Class C Retail Alcohol License; Lucky Wife Wine Slushies, 109 W 2nd St N, Special Class C Retail Alcohol License for Special Event on August 9, 2024 and 100 Block of W 2nd St N for Special Event on September 6, 2024, and 3030 N 4th Ave E for Special Event on October 12, 2024 ; Loves Travel Stop #361 - LG0000961, 4400 S 22nd Ave E, Class B Retail Alcohol License
5. Approve 2024 - 2025 Cigarette/Tobacco/Nicotine/Vapor License for Newton Tobacco & Vape, LLC, 309 Iowa Speedway Dr
6. Resolution appointing Development Specialist Craig Armstrong to serve as Primary Representative and NHDC Director Bruce Showalter as Alternate Representative to the Central Iowa Regional Housing Authority for a three-year term ending June 30, 2027
7. Resolution fixing the amounts to be assessed against individual private properties for the abatement of nuisance violations (Schedule No. 24-09)
8. Resolution levying assessments for costs of nuisance abatement and providing for the payment thereof (Schedule 24-08)

9. Resolution accepting completion of the Maytag Pool Improvements Project
10. Resolution accepting completion of the Aurora Park Pickleball Courts Project
11. Resolution accepting completion of the Westwood Golfcourse Clubhouse Grading Project
12. Resolution approving the purchase of a truck and truck bed toolbox for Community Development
13. Resolution approving the agreement with Musco Lighting for the Maytag Park Mini-Pitch Project
14. Resolution approving the submittal of an Iowa DNR Resource and Protection (REAP) grant application for the Cardinal Pond Improvements Project
15. Resolution accepting completion of the Fairmeadows North Plat 7 Storm Sewer Improvement Project
16. Resolution approving a non-standard improvement in the City Right-of-Way with the property owner of 308 1st Ave E
17. Resolution approving a contracted payment to Axon, LLC for an in-car and body camera system
18. Resolution accepting an electric line easement on 1219 S 4th Ave E Newton, Iowa
19. Resolution Approving the Annual Support Fees for the Fire Department Record Management Software
20. Resolution setting a public hearing for the sale of City-owned property at 1008 and 1010 East 8th Street North in Newton, Jasper county, Iowa
21. Approve Bills

Public Hearing

22. Public hearing on a resolution approving the purchase agreement for real property at 315, 319, and 321 East 8th Street South Newton, Jasper County, Iowa

    - Because the notice for the previous public hearing was not published in the Newton Daily News, it is necessary to hold the public hearing on the sale of this property again.
    - There are no other received offers and no changes to the purchase agreement with VL Construction are proposed.

23. Resolution approving the purchase agreement for real property at 315, 319, and 321 East 8th Street South Newton, Jasper County, Iowa

Ordinance

24. First consideration of an Ordinance Amending the Code of Ordinances, City of Newton, Iowa, 2016, Title VII, Chapter 70, Section 70.15, "Traffic and Parking Schedules Adopted by Reference", to make changes to street parking in the 500-700 block of W 3rd St S

    - The City received safety concerns regarding street parking in the 500-700 blk. of W 3rd St S.

- The Traffic Safety Committee reviewed the situation and, based on established standards and policy, recommends restricting parking on both sides of the street.
- 28 Surveys of the neighborhood were conducted with 7 residents approving of the proposed changes and 2 opposing.

25. First consideration of an ordinance amending the code of ordinances, City of Newton, Iowa, 2016, Title V Public Works, By adding Chapter 53 Stormwater Utility

- At the October 19, 2020, City Council Meeting, the Newton City Council approved the creation of a Stormwater Utility Ordinance, which was the result of the City of Newton's need for funds to be dedicated to the sole purpose related to stormwater activities.
- The ordinance established the Equivalent Residential Unit (ERU) of Four Thousand (4,000) square feet of impervious area as the official unit of measurement and an initial ERU rate of $4.00. The ERU rate increased to $4.25 on July 1, 2022 and to $4.50 on July 1, 2023.
- The initial ordinance did not include additional rate increases after July 1, 2023, and no increase is planned for July 1, 2024.
- Staff recommends increasing the ERU rate by twenty-five cents on July 1st of each year for the next five years starting on July 1, 2025.

Resolution

26. Resolution renewing the insurance package with Iowa Communities Assurance Pool (ICAP)

- In June 1998, the City Council awarded a bid for property, liability and automobile insurance coverage to Clemon-Maki Insurance Associates using the Iowa Communities Assurance Pool (ICAP). More than 280 other city governments in Iowa belong to the ICAP risk pool.
- The 2024 renewal is $652,500, up from $443,321 in 2023 due to an increase in vehicle coverage, property coverage, and the high number of claims from the hail storm, losses, and the increased cost of construction.

27. Resolution approving the granting of Downtown Improvement Grant funds for 306 1st Avenue West, Newton, Iowa, in the sign, façade, and awning program areas

- At their meeting on July 17th, the Downtown Grant Review Board recommended approval of downtown improvement grants for 306 1st Avenue West to Randy & Marily Terlouw and Ella Nguyen for signage, facade, and awning work.
- The recommended grant amounts are $1,571.25 to Terlouw and $1,607.00 to Nguyen, provided a 1:1 match is met.

28. Resolution approving plans, specifications, and form of contract, and ordering clerk to publish notice for a public hearing on plans, specifications, form of contract, and estimate of costs for the Westwood Golf Course Clubhouse Project

- City staff then began working on an alternate plan to construct a more affordable clubhouse, which would include phasing of the preliminary projects and which would satisfy the language of the bond referendum.
- Previous projects, including asbestos abatement, demolition, site grading, and utilities, have been completed.
- This project will construct footings and other accompanying improvements for the setting and construction of a 60' X 100' post-frame building by Morton Buildings, Inc. under a separate contract.

29. Resolution awarding a contract for the Westwood Golfcourse Clubhouse shell

- ISG, on behalf of the City of Newton, sought competitive quotes from Morton Buildings, Inc. and Greiner Buildings for a post-frame 60' X 100' building following Iowa Code Chapter 26. Morton Buildings, Inc. supplied the lowest quote of $190,338.00, which was $1,212.00 lower than Greiner Buildings, even with the addition of a $5,000 bond.
- The project is to be completed this fall to allow time for the accompanying project to be completed before December 6, 2024. The $190,338.00 project cost will be paid from ARPA funds.

30. Resolution approving Marketing Agreement with Utility Service Partners Inc

- The NLC Service Line Program will utilize the City logo to brand the materials used to educate City residents/customers about our repair service plans.
- Program marketing literature clearly discloses that the Program and the City are separate entities and that the program is voluntary for residents.
- The NLC Service Line Warranty Program will create all marketing materials with input from the City and will submit all marketing/communications materials to the City for final approval.

31. Resolution authorizing the Newton Fire Department to accept the 2023 assistance to firefighters grant award in the amount of $ 77,076.48

- The Fire Department has received notification for selection for a 2023 Assistance to Firefighters Grant in the amount of $77,076,48 and requires a local match of 5%, or $3,703.82.

- This grant program was a result of the events of 9/11/2001 and continues to provide funding for needed equipment in emergency services.
- This grant will be used for the upgrade of the Plymovent Exhaust Removal System, NFPA 1001 Firefighter Training Resources, and Audio-Visual Equipment.

32. Resolution Authorizing The City Of Newton To Respond To A Request For Proposal From Pyrotechnics Guild International, Inc. (PGI) To Host The 2025 PGI Convention On Property Owned By The City And A Private Landowner

- The Pyrotechnics Guild International hosted a convention in Newton in August off 2022 which generated an estimated economic impact of more than $2 million in Newton and Jasper County.
- PGI officials recently contacted Newton representatives to inquire about the City hosting another convention in the summer of 2025 and invited Newton to respond to their request for proposals.
- The City's response must be submitted before August 9, 2024.

33. Resolution approving Change Order #3 for the Arbor Estates 2nd Addition Public Improvements Project

- The City, in partnership with the Newton Housing Development Corporation (NHDC), has been working to increase residential subdivision development in northeast Newton.
- Twelve lots on N 10th Ave E were originally to be constructed as single-family homes. In June 2023, the decision was made to accommodate duplexes. City code requires that for multiple occupancy buildings, such as the proposed duplexes, each unit should be considered a separate utility customer and be metered and billed separately.
- Change order #3 is to install one additional water service for the twelve N 10th Ave E lots. The proposal from McAninch, Corp, which includes an additional 85 SY of necessary pavement removal and replacement, is $57,425.84.

Staff Report

34. Annual Finance Update - Lisa Frasier, Finance Officer

Mayor/Council Comments

35. Mayor and Council Comments

Closed Session

36. To Discuss Strategy with Counsel in Matters that Are Presently in Litigation or Where Litigation is Imminent Where its Disclosure Would be Likely to Prejudice or Disadvantage the Position of the Governmental Body in that Litigation, Which Discussions are Exempt from the Open Meetings Law Pursuant to the Provision of Section 21.5(1)(c), Code of Iowa 2024

Return to Open Session

37. Return to Open Session

Adjourn

The City of Newton is pleased to provide reasonable accommodations, in compliance with the Americans with Disabilities Act, for those individuals or groups who require assistance to be able to participate in the public meeting. Should special accommodations be required, please contact the City Clerk's Office at least 48 hours in advance of the meeting, at 641-792-2787 to arrange for accommodations to be provided.

Find us online: www.newtongov.org

NEWTON CITY COUNCIL MEETING MINUTES
JULY 15, 2024, 6:00 PM

Pledge

Pledge of Allegiance
Mayor George asked everyone present to join in saying the Pledge of Allegiance.

Call to Order

1. Roll Call
The City Council of Newton, Iowa met in regular session at 6:00 P.M. on the above date in the Council Chambers at 101 West 4th Street South. Mayor George presided. Present Council Members: Mills, Mullan, Dalton, Hallam, Simbro, Ervin. Absent: None.

Presentation

2. National League of Cities - Homeserve service line protection program - Jody Rhone, Utilities Director & Ashley Shiwarski, Sr. Director, Business Development HomeServe
This program is sponsored by the National League of Cities. It offers optional protection for water, sewer, and in home plumbing service lines. They cover up to $8500 towards each incident.

Citizen Participation

3. Donna Stumie, 401 E 10th St S, informed council that she had received praise for council member Mark Hallem for being kind, a good listener, and very nice. She also commented about receiving a nuisance notice following the flood and, due to the emergency, maybe there should be some compassion.

Consent Agenda
Moved by Ervin, seconded by Hallam to approve consent agenda items 4-17. Moved by Ervin, seconded by Mills to remove item # 7, Resolution levying assessments for costs of nuisance abatement and providing for the payment thereof (Schedule 24-07), from the consent agenda to vote on it as an individual item. AYES: Six. NAYS: None. The motion to remove item #7 was approved. AYES: Six. NAYS: None. Consent Agenda was adopted.
Moved by Hallam, seconded by Mullan to approve item # 7, Resolution levying assessments for costs of nuisance abatement and providing for the payment thereof (Schedule 24-07). Moved by Ervin, seconded by Mills to amend the schedule by removing the top item for parcel 826301004 due to the emergency situation. AYES: Five. NAYS: Mullan. The amendment to the motion passed. AYES: Five. NAYS: Mullan.

4. July 1, 2024 Regular City Council Meeting Minutes

5. Approve Liquor Licenses for the following: Newton Lodge #1270, B.P.O. Elks- LF0000274, 111 East 2nd Street, S

6. Certify Firefighter List

7. Resolution levying assessments for costs of nuisance abatement and providing for the payment thereof (Schedule 24-07)
Resolution 2024-241 adopted.

8. Resolution fixing the amounts to be assessed against individual private properties for the abatement of nuisance violations (Schedule No. 24-08)
Resolution 2024-242 adopted.

9. Resolution approving Task Order 24-03 with Strand Associates Engineering for application assistance in completing the 2024 National Pollutant Discharge Elimination System (NPDES) permit
Resolution 2024-243 adopted.

10. Resolution approving Westwood Creek pump repairs
Resolution 2024-244 adopted.

11. Resolution approving Second amendment to contract with IEDA on $600,000 Downtown Housing Grant
Resolution 2024-245 adopted.

12. Resolution authorizing the Iowa State University Child Passenger Safety Survey in the City of Newton Parks System
Resolution 2024-246 adopted.

13. Resolution approving payment to Axon, LLC for Police Department in-car and body camera system
Resolution 2024-247 adopted.

14. Resolution approving payment to MyGov, LLC. for nuisance reporting software
Resolution 2024-248 adopted.

15. Resolution approving a conflict waiver with Ahler's and Cooney P.C. and the City of Pella for

law enforcement services at Iowa Speedway events
Resolution 2024-249 adopted.

16. Resolution setting a public hearing for the sale of City-owned property at 315, 319, and 321 East 8th Street South in Newton, Jasper County, Iowa
Resolution 2024-250 adopted.

17. Approve Bills

Public Hearing

18. Public Hearing on a Resolution awarding contract for the 2024-01 Downtown Streetscape Improvements Project
Mayor George stated that this is the time and place for a Public Hearing on the above Resolution. There were no written comments. Moved by Hallam, seconded by Dalton to close the public hearing. AYES: Six. NAYS: None. The public hearing was closed.

19. Resolution awarding contract for the 2024-01 Downtown Streetscape Improvements Project
Moved by Hallam, seconded by Mullan to adopt the Resolution. AYES: Six. NAYS: None. Resolution 2024-251 adopted.

20. Public Hearing on a Resolution awarding contract for the 2024 HMA Resurfacing Project
Mayor George stated that this is the time and place for a Public Hearing on the above Resolution. There were no written comments. Moved by Dalton, seconded by Mullan to close the public hearing. AYES: Six. NAYS: None. The public hearing was closed.

21. Resolution awarding contract for the 2024 HMA Resurfacing Project
Moved by Ervin, seconded by Dalton to adopt the Resolution. AYES: Six. NAYS: None. Resolution 2024-252 adopted.

Ordinance

22. Second Consideration of an Ordinance amending the Code of Ordinances, City of Newton, Iowa, 2016, Title V, Chapter 53: Stormwater Utility
Moved by Ervin, seconded by Mills to approve the second consideration of the Ordinance. During discussions, it was moved by Mullan, seconded by Simbro to amend the ordinance setting the plan that would increase the rate by $0.25 per year for 5 years due to the increasing cost of fixing the storm water. This would cancel the second consideration and council would start with the first reading of the amendment at the next meeting. AYES: Four. NAYS: Hallam, Ervin.

Resolution

23. Resolution approving change order #3 for the WPC Plant Improvements Project
Moved by Dalton, seconded by Mullan to adopt the Resolution. AYES: Six. NAYS: None. Resolution 2024-253 adopted.

24. Resolution Authorizing Temporary Positions in the Utility Billing Division of the Administration Department
Moved by Dalton, seconded by Mills to adopt the Resolution. AYES: Six. NAYS: None. Resolution 2024-254 adopted.

25. Resolution Authorizing Amendments to the City of Newton Employee Handbook Regarding Clothing Allowances
Moved by Simbro, seconded by Mills to adopt the Resolution. AYES: Six. NAYS: None. Resolution 2024-255 adopted.

26. Resolution adopting the nuisance abatement contractor rate
Moved by Mills, seconded by Mullan to adopt the Resolution. Discussion ensued regarding the cost. It was moved by Ervin to amend the resolution to a $75 per hour contractor rate versus the proposed $100 per hour recommendation. The amendment died due to lack of second. AYES: Five. NAYS: Ervin. Resolution 2024-256 adopted.

Mayor/Council Comments

27. Mayor and Council Comments
It was announced that FEMA would be back in town to work with citizens that needed assistance due to the flood. Ervin spoke about the success of the Indy race at the Iowa Speedway. He spent time with several people that were interested in investing in our community. Forty-four percent of Indy fans came from outside the state. The race was great for tourism, not only in Newton but also in Iowa. KCCI also did an interview with Craig Armstrong emphasizing many positives happening in Newton. Simbro shared a list of several streets with parking issues he received from Donna Stumie.

Adjourn
Moved by Dalton, seconded by Mills to adjourn the meeting at 7:12 P.M. Motion unanimously carried by voice vote.

Katrina Davis, City Clerk

Evelyn George, Mayor

City of Newton Council Report

Item:
Resolution appointing Development Specialist Craig Armstrong to serve as Primary Representative and NHDC Director Bruce Showalter as Alternate Representative to the Central Iowa Regional Housing Authority for a three-year term ending June 30, 2027

Report Number: 2024-692
Date:
August 5, 2024
Lead Department:
Community Development
Recommendation:
Approve

Summary:
As a member government of the Central Iowa Regional Housing Authority (CIRHA), the Mayor of the City of Newton is obligated to appoint a Representative and Alternate to serve a three-year term on the CIRHA Board of Commissioners.

Financial Impact:
None.

Background:
The City of Newton is a member of the Central Iowa Regional Housing Authority (CIRHA) through a 28E Agreement. As a member government, a Representative and Alternate are appointed by the Mayor to serve a three-year term on the CIRHA Board of Commissioners.

Representatives can be anyone approved by the City Council and may include elected officials or employees of the City. The only disallowance would be a conflict of interest, such as being a Section 8 landlord.

Since the term of Newton's current Representative, Craig Armstrong, and Alternate Representative, Bruce Showalter, have expired, a Resolution re-appointing them must be executed, along with an updated Certificate of Membership. In addition, both the Representative and Alternate must sign a notarized Oath of Office.

Recommendation:
City Staff recommends approval of the Resolution.

RESOLUTION NO. 2024 - _____

RESOLUTION RE-APPOINTING DEVELOPMENT SPECIALIST CRAIG ARMSTRONG TO SERVE AS PRIMARY REPRESENTATIVE AND NHDC DIRECTOR BRUCE SHOWALTER AS ALTERNATE REPRESENTATIVE TO THE CENTRAL IOWA REGIONAL HOUSING AUTHORITY FOR A THREE-YEAR TERM ENDING JUNE 30, 2027

WHEREAS, the City of Newton has considered and adopted a Resolution declaring a need for a Housing Authority in the City of Newton; and

WHEREAS, the City of Newton has adopted the Articles of Agreement creating the Central Iowa Regional Housing Authority (CIRHA), dated February 12, 1980; and

WHEREAS, each member government shall have one representative and one alternate to CIRHA to serve for a term of three years; and

WHEREAS, such Representative shall be appointed by the Mayor with approval from the local governing body;

NOW, THEREFORE, BE IT RESOLVED by the City Council of Newton, Iowa, pursuant to the provisions of Chapter 28E, Code of Iowa, 1981, and by virtue of our office, we hereby approve the Mayor's re-appointment of the persons hereafter named to serve as Representative and Alternate to CIRHA, representing the City and to serve for three years, with a term ending June 30, 2027.

Representative: Craig Armstrong
City of Newton
303 W 4th Street N, Suite 501
Newton, Iowa 50208

Alternate: Bruce Showalter
Newton Housing Development Corporation
PO Box 102
Newton, IA 50208

PASSED this 5th day of August, 2024

APPROVED this _____ day of August, 2024

_____
Evelyn George, Mayor

ATTEST:

_____
Katrina Davis, City Clerk

City of Newton Council Report

Item:
Resolution fixing the amounts to be assessed against individual private properties for the abatement of nuisance violations (Schedule No. 24-09)

Summary:
The City of Newton abated some nuisances, such as tall grass/weeds, trash, or snow. These costs remain unpaid by the property owner(s) and should be assessed to the property taxes.

Financial Impact:
Cost Recovery: $6,668.60

Report Number: 2024-700
Date:
August 5, 2024
Lead Department:
Police
Recommendation:
Approve

Background:
The City continues to work towards better curb appeal and improved aesthetics within the community. The City abated violations that remained non-compliant after the initial warning period. The attached schedule lists owner, parcel number, address, amount to be assessed, date work was completed, property legal description, and property valuation.

Recommendation:
City Staff recommends approval of the Resolution fixing the amounts to be assessed against individual private properties for the abatement of nuisance violations.

Matt Muckler, City Administrator

RESOLUTION 2024- _____

RESOLUTION FIXING THE AMOUNTS TO BE ASSESSED AGAINST INDIVIDUAL PRIVATE PROPERTIES FOR THE ABATEMENT OF NUISANCE VIOLATIONS (SCHEDULE NO. 24-09)

WHEREAS, the City of Newton has abated nuisance violations at the addresses as found in Schedule No. 24-09: Assessment for the Expenses for Nuisance Abatement; and

WHEREAS, the City of Newton has maintained a report of the abatement costs for each individual property as found in Schedule 24-09: Assessment for the Expenses for Nuisance Abatement; and

WHEREAS, the expenses have been billed to the property owners and remain unpaid.

NOW THEREFORE, BE IT RESOLVED by the City Council of Newton, Iowa, that the Schedule 24-09: Assessment for the Expenses for Nuisance Abatement is approved.

NOW THEREFORE, BE IT FURTHER RESOLVED by the City Council of Newton, Iowa, that the City Clerk is hereby directed to prepare, sign, and file in the clerk's office the Schedule 24-09: Assessment for the Expenses for Nuisance Abatement.

PASSED this _____ day of August, 2024.

APPROVED this _____ day of August, 2024.

_____
Evelyn George, Mayor

ATTEST:

_____
Katrina Davis, City Clerk

Schedule 24-09: Assessment for the Expenses for Nuisance Abatement

Deed/Contract Holder	Parcel Number	Property Address	City	Net Assessed Property Value	Abatement Fee	Admin. Fee	Total Amount Assessed	Legal	Date Abated
Artisan American LLC	834452015	905 E 8th St S	Newton	$94,060	$60.00	$75.00	$135.00	HARLAN'S SD LOT 13 & N 6' LOT 16 BLK 4	6/12/2024
Michael Atchison	834231017	830 1st Ave E	Newton	$80,240	$60.00	$75.00	$135.00	EAST ADD LOT E SD LOT 7	6/14/2024
Randy Cline	835426029	701 E 24th St S	Newton	$85,640	$60.00	$75.00	$135.00	AURORA HEIGHTS SD LOT 14 BLK O	6/10/2024
CWF of Newton LLC	828455010	539 W 9th St N	Newton	$103,340	$60.00	$75.00	$135.00	GREENCASTLE PLACE LOT 7 BLK B	6/10/2024
Ruth Kelly	826302017	807 E 12th St Pl N	Newton	$150,030	$60.00	$75.00	$135.00	EMERSON HOUGH PLACE NO. 2, LOT 7 BLK J	6/13/2024
CE Pete Koppin Trust	827407005	612 N 9th Ave E	Newton	$114,860	$60.00	$75.00	$135.00	EDMUNDSON'S ADD E 66' LOTS 6-7 BLK 9	6/14/2024
Patrick McDermott	835401007	506 E 19th St S	Newton	$97,750	$60.00	$75.00	$135.00	AURORA HEIGHTS SD LOT 20 BLK B	6/12/2024
Shayne Naber & Terry Hevelone	835408013	717 E 20th St S	Newton	$116,060	$60.00	$75.00	$135.00	AURORA HEIGHTS SD LOT 12 BLK C	6/10/2024
Lillian Prendergast Trust	835153004	410 E 12th St S	Newton	$59,210	$60.00	$75.00	$135.00	SCHARF'S SD LOT 7	6/13/2024
Robert Spinney	826352024	601 E 13th St N	Newton	$83,910	$60.00	$75.00	$135.00	EMERSON HOUGH PLACE LOT 12 BLK B	6/12/2024
Marshall Treleven	835280012	400 E 27th St S	Newton	$158,670	$60.00	$75.00	$135.00	AURORA HEIGHTS SD LOTS 7-9 BLK Y	6/10/2024
Justin Vanhorn	835103016	1332 Glenway Dr	Newton	$90,620	$60.00	$75.00	$135.00	BELMONT PARK LOT 17 BLK 1	6/10/2024
2C Industries LLC	835405004	508 E 21st St S	Newton	$76,940	$60.00	$75.00	$135.00	AURORA HEIGHTS SD LOT 30 BLK D	6/13/2024
Roberta Albertson	1303203006	1400 E 7th St S	Newton	$91,770	$420.00	$75.00	$495.00	LISTER'S ACRES LOT 24	6/18/2024
Robin Maddison	834303020	525 W 2nd St S	Newton	$155,990	$120.00	$75.00	$195.00	STONE'S ADD LOT E	6/18/2024
Maxwell Midwest Holdings Company LLC	835134004	1500 1st Ave E	Newton	$522,560	$60.00	$75.00	$135.00	NELSON MANOR ADD LOT 1 EX PARCEL C	6/18/2024
MSG Newton Properties LLC	827327008	430 N 8th Ave E	Newton	$411,940	$385.00	$75.00	$460.00	KILLDUFF'S SD LOT B EX N 66'	6/12/2024
Peter Murphy	834278010	220 E 10th St S	Newton	$123,450	$120.00	$75.00	$195.00	BENNETT'S SD LOT 7	6/17/2024
Nationstar Mortgage LLC	833206003	1116 1st Ave W	Newton	$87,080	$120.00	$75.00	$195.00	EXLINE'S ADD E 50' LOT 3 BLK 5 EX HIGHWAY & EX PART SOLD TO STATE	6/17/2024
Donald Parsons	833282014	625 S 3rd Ave W	Newton	$166,710	$60.00	$75.00	$135.00	WEST NEWTON LOT 2 BLK C	6/18/2024
CRL Real Estate LLC	827427001	924 E 9th St N	Newton	$115,180	$207.40	$75.00	$282.40	EDMUNDSON'S ADD LOT 10 & N 22' LOT 9 BLK 12	6/26/2024
Mark Lowenberg	833228017	415 N 2nd Ave W	Newton	$94,120	$60.00	$75.00	$135.00	WEST NEWTON LOT 3 SD LOT 43	6/20/2024
Maxwell Midwest Holdings Company LLC	835134003	201 E 15th St N	Newton	$75,080	$100.00	$75.00	$175.00	NELSON MANOR ADD LOT 2 & PARCEL C OF LOT 1	6/25/2024
Richard Miller	827411002	820 E 6th St N	Newton	$73,970	$290.00	$75.00	$365.00	EDMUNDSON'S ADD LOT 11 & S 8' LOT 12 BLK 20	6/26/2024
Kalpesh Patel	1305226018	1705 W 19th St S	Newton	$89,250	$150.00	$75.00	$225.00	PARCEL N IN NE FRL 1/4 OF NE FRL 1/4 & SE 1/4 OF NE FRL 1/4	6/27/2024
Kalpesh Patel	1305226005	1805 W 19th St S	Newton	$10,650	$150.00	$75.00	$225.00	2.13 AC TRACT NE 1/4	6/27/2024
Lee Silvia	833282002	308 W 8th St S	Newton	$89,660	$60.00	$75.00	$135.00	WEST NEWTON S 55' LOT 8 BLK C & N 1/2 OF ALLEY ON S	6/20/2024
Armelda Sutton	835408003	1905 S 7th Ave E	Newton	$67,980	$180.00	$75.00	$255.00	AURORA HEIGHTS SD LOT 4 BLK C	6/24/2024
Armelda Sutton	835408003	1905 S 7th Ave E	Newton	$67,980	$400.00	$75.00	$475.00	AURORA HEIGHTS SD LOT 4 BLK C	6/25/2024
Ian Westbrook	827304015	827 1st St N	Newton	$153,440	$60.00	$75.00	$135.00	AINSWORTH & WHEELER'S SD, LOT 2 OF LOT U EX W 180.5'	6/25/2024
John White	827481013	1010 N 5th Ave E	Newton	$98,920	$60.00	$75.00	$135.00	BROWN'S SD LOT 11 BLK D	6/21/2024
Alika Lynn	833283023	702 S 5th Ave W	Newton	$88,930	$60.00	$150.00	$210.00	WEST NEWTON LOTS H & J BLK D	7/1/2024
Manuel Hidanovic	834276022	306 E 8th St S	Newton	$39,260	$60.00	$75.00	$135.00	EASTSIDE SD W 111' 10" LOT 2	6/29/2024
Paul & Kelley Mattingly	826352001	712 E 12th St Pl N	Newton	$115,010	$141.20	$75.00	$216.20	EMERSON HOUGH PLACE LOT 24 BLK B	6/29/2024
						TOTAL:	**$6,668.60**		

City of Newton Council Report

Item:
Resolution levying assessments for costs of nuisance abatement and providing for the payment thereof (Schedule 24-08)

Report Number: 2024-699

Date:
August 5, 2024

Lead Department:
Police

Recommendation:
Approve

Summary:
The City of Newton abated some nuisances, such as tall grass/weeds and/or trash. These costs remain unpaid by the property owner(s) and should be assessed to the property taxes.

Financial Impact:
Cost Recovery: $1,755.00

Background:
At their last meeting, City Council approved a Schedule of Assessment for the Expenses of Nuisance Abatement. The total amount for cost recovery is $1,755.00.
The attached schedule lists owner, parcel number, address, amount to be assessed, date work was completed, property legal description, and property valuation.
With the approval of this resolution, the costs expended by the City for the abatement of nuisances will be placed on the taxes as a special assessment for each property.

Recommendation:
Staff recommends approval of the resolution levying assessments for costs of nuisance abatement and providing for the payment thereof (Schedule 24-08).

Matt Muckler, City Administrator

RESOLUTION NO. 2024 – _____

RESOLUTION LEVYING ASSESSMENTS FOR COSTS OF NUISANCE ABATEMENT AND PROVIDING FOR THE PAYMENT THEREOF (SCHEDULE 24-08)

WHEREAS, pursuant to its powers and duties as set out in Chapter 364, Code of Iowa, the City of Newton, after the property owner's failure upon being given notice and opportunity to cure, has performed the required action to abate the public nuisance and now seeks, as provided in 364.12, Code of Iowa, to assess the costs of such action against each of the properties set out on the attached Schedule No. 24-08 for collection in the same manner as the property tax.

NOW, THEREFORE, BE IT RESOLVED, that the attached Schedule No. 24-08, is hereby approved and adopted with the amounts shown thereon assessed and levied against each property for the collection in the same manner as a property tax.

BE IT FURTHER RESOLVED, that said assessments shall be payable in 1 annual installment and shall bear interest at the rate of 3.88 percent per annum, from the date of the acceptance of this assessment schedule; the one installment of each assessment with interest on the whole assessment from date of acceptance of this schedule by the Council shall become due and payable on August 14, 2024, and shall be paid at the same time and in the same manner as the semiannual payment of ordinary taxes. Said assessment shall be payable at the office of the County Treasurer of Jasper County, Iowa, in full and without interest within thirty days after first date of publication of the Notice to Property Owners of filing the schedule of assessments.

BE IT FURTHER RESOLVED, that the Clerk be and is hereby directed to certify said schedule to the County Treasurer of Jasper County, Iowa and to publish notice of said certification once each week for two consecutive weeks in the Newton Daily News, a newspaper printed wholly in the English language, published in Newton, Iowa, and of general circulation in Newton, Iowa, the first publication of said notice to be made within fifteen days from the date of the filing of said schedule with the County Treasurer, the City shall send by regular mail to all property owners whose property is subject to assessment a copy of said notice, said mailing to be on or before the date of the second publication of the notice all as provided and directed by Code Section 384.60, Code of Iowa.

PASSED this _____ day of August, 2024.

APPROVED this _____ day of August, 2024.

_____
Evelyn George, Mayor

ATTEST:

_____
Katrina Davis, City Clerk

Schedule 24-08: Assessment for the Expenses for Nuisance Abatement

Deed/Contract Holder	Parcel Number	Property Address	City	Net Assessed Property Value	Abatement Fee	Admin. Fee	Total Amount Assessed	Legal	Date Abated
Michael Ault	835204007	200 E 20th St N	Newton	$177,830	$90.00	$75.00	$165.00	FAIRMEADOWS ADD PHASE 2 LOT 54	6/5/2024
Farrell Properties Inc	835283003	204 E24th St S	Newton	$16,440	$120.00	$75.00	$195.00	PARK PLACE CONDOMINIUMS LOCATED ON PT PARCEL B BLK Q AURORA HEIGHTS SD EX LOT 9 BLK Q LYING WITHIN PARCEL B	6/3/2024
Manuel Hidanovic	834276022	306 E 8th St S	Newton	$39,260	$60.00	$75.00	$135.00	EASTSIDE SD W 111' 10" LOT 2	6/5/2024
Lee Silva	833282002	308 W 8th St S	Newton	$89,660	$60.00	$75.00	$135.00	WEST NEWTON S 55' LOT 8 BLK C & N 1/2 OF ALLEY ON S	6/3/2024
Rodney Taber	827107004	1525 1st St N	Newton	$103,450	$240.00	$75.00	$315.00	NELSON'S SD LOT 18	5/30/2024
Matthew Townsend	827154005	1115 1st St N	Newton	$106,370	$60.00	$75.00	$135.00	MYER'S SD LOT 31	6/5/2024
US Bank National Association	834154001	121 1st Ave W	Newton	$33,490	$60.00	$75.00	$135.00	ORIGINAL PLAT W 44.25' LOT 4 BLK 20	5/28/2024
VB Properties LLC	833432025	723 W 6th St S	Newton	$85,920	$75.00	$75.00	$150.00	W C GUNNS SD E 75' LOT 26	6/5/2024
Ian Westbrook	827304015	827 1st St N	Newton	$153,440	$180.00	$75.00	$255.00	AINSWORTH & WHEELER'S SD, LOT 2 OF LOT U EX W 180.5'	5/28/2024
Westward Tax Service V	1303202004	619 S 13th Ave E	Newton	$10,290	$60.00	$75.00	$135.00	LISTER'S ACRES E 1/2 LOT 5 EX W 2' OF N 1/2 & E 2' OF S 1/2 OF W 1/2 LOT 5	6/6/2024
						TOTAL:	$1,755.00		

City of Newton Council Report

Item:
Resolution accepting completion of the Maytag Pool Improvements Project

Report Number: 2024-643
Date:
August 5, 2024
Lead Department:
Community Development
Recommendation:
Approve

Summary:
Accept completion of the contract to construct the base project plus add-alternate no. 1-1 on the Maytag Pool Improvements Project

Financial Impact:
Council previously approved a contract for $1,052,826.00 on September 5, 2023, and this action would accept the project and authorize payment of the retainage amount of $52,706.57.

Background:
On September 13, 2022, Newton residents approved a park bond referendum, which included upgrades to Maytag Pool. The project includes the removal of existing shallow-end fountains and seating area, installation of a new shallow-end play structure, replacement of the existing 3-meter diving board with a new 3-meter board with stair access, shade structure upgrades, piping upgrades beneath the shallow end, and a zip-line play feature (add-alt. no. 1-1).

City Council passed a resolution on September 5, 2023, awarding a contract to Sande Construction of Humboldt, Iowa, for $1,052,826.00. The project engineer has signed the Statement of Completion Form stating that the project has been substantially completed in general compliance with the contract's terms, conditions, and stipulations. The final contract amount, based on actual measured quantities of work and the issuance of one change order completed, is $1,054,131.00.

Recommendation:
City staff recommends accepting the completion of the Maytag Pool Improvements Project and authorizing the retainage amount of $52,706.57 to be paid to the contractor no sooner than 30 days after approval of this resolution should no claims be on file.

Matt Muckler, City Administrator

RESOLUTION 2024- _____

RESOLUTION ACCEPTING COMPLETION OF THE MAYTAG POOL IMPROVEMENTS PROJECT

WHEREAS, on September 5, 2023, City council approved a resolution awarding a contract to Sande Construction of Humboldt, Iowa, in the amount of $1,052,826.00; and

WHEREAS, Sande Construction has completed the work, and the project engineer has signed the Statement of Completion Form stating that the project has been substantially completed in general compliance with the terms, conditions, and stipulations of said contract; and

WHEREAS, the final contract amount, based on the issuance of one change order and actual measured quantities of work completed is $1,054,131.00.

NOW, THEREFORE, BE IT RESOLVED, by the City Council of the City of Newton, Iowa, that the City of Newton hereby accepts the completion of the project and authorizes the Community Development Director to execute payment of the retainer in the amount of $52,706.57 no sooner than 30 days after approval of this resolution should no claims be on file, with said payment to be made using 2023 Park Bond proceeds.

PASSED this _____ day of August, 2024.

APPROVED this _____ day of August, 2024.

_____
Evelyn George, Mayor

ATTEST:

_____
Katrina Davis, City Clerk

City of Newton Council Report

Item:
Resolution accepting completion of the Aurora Park Pickleball Courts Project

Summary:
Accept completion of the contract to complete the construction of four new stand-alone pickleball courts at Aurora Park.

Financial Impact:
Council previously approved a contract for $370,000 on August 28, 2023, and this action would accept the project and authorize payment of the retainage amount of $18,500.00.

Report Number: 2024-683
Date:
August 5, 2024
Lead Department:
Community Development
Recommendation:
Approve

Background:
On September 13, 2022, Newton residents approved a park bond referendum, which included the construction of pickleball courts in Aurora Park. Prior to seeking bids and awarding a contract for construction, the City Council approved a design services agreement with the City's engineering consultant, Bolton and Menk, to prepare plans and specifications for the project. The plans were completed, and bids were opened on August 22, 2023.

City Council passed a resolution on August 28, 2023, awarding a contract to Minturn, Inc. for $370,000.00. The project engineer has signed the Statement of Completion Form stating that the project has been substantially completed in general compliance with the contract's terms, conditions, and stipulations. The final contract amount, based on actual measured quantities of work completed, is $370,000.00.

Recommendation:
City staff recommends accepting the completion of the Aurora Park Pickleball Courts Project and authorizing the retainage amount of $18,500.00 to be paid to the contractor no sooner than 30 days after approval of this resolution should no claims be on file.

Matt Muckler, City Administrator

RESOLUTION 2024- _____

RESOLUTION ACCEPTING COMPLETION OF THE AURORA PARK PICKLEBALL COURTS PROJECT

WHEREAS, on August 28, 2023, City council approved a resolution awarding a contract to Minturn, Inc. of Brooklyn, IA, in the amount of $370,000.00; and

WHEREAS, Minturn, Inc. has completed the work, and the project engineer has signed the Statement of Completion Form stating that the project has been substantially completed in general compliance with the terms, conditions, and stipulations of said contract; and

WHEREAS, the final contract amount, based on actual measured quantities of work completed is $370,000.00.

NOW, THEREFORE, BE IT RESOLVED, by the City Council of the City of Newton, Iowa, that the City of Newton hereby accepts the completion of the project and authorizes the Public Works Director to execute payment of the retainer in the amount of $18,500.00 no sooner than 30 days after approval of this resolution should no claims be on file, with said payment to be made using a mix of Wellmark Grant funds, private donations, and 2023 Park Bond Proceeds.

PASSED this _____ day of August, 2024.

APPROVED this _____ day of August, 2024.

_____
Evelyn George, Mayor

ATTEST:

_____
Katrina Davis, City Clerk

City of Newton Council Report

Item:
Resolution accepting completion of the Westwood Golfcourse Clubhouse Grading Project

Summary:
Accept completion of the contract for grading and utilities for the Westwood Clubhouse Grading Project

Financial Impact:
The council previously approved a contract for $68,036.42 on December 18, 2023, and a change order for $5,235.99 on July 1, 2024. This action would accept the project and authorize payment of the retainage amount of $3,663.62.

Report Number: 2024-686
Date:
August 5, 2024
Lead Department:
Public Works
Recommendation:
Approve

Background:
On September 13, 2022, Newton residents approved a park bond referendum, which included the construction of a new clubhouse at the Westwood Golf Course. This led to plans being prepared and bids received on August 17, 2023, for said clubhouse project. Due to high bid prices received, said bids were then rejected by City Council per Resolution 2023-245 on September 5, 2023. City staff reacted immediately by working on an alternate plan to construct a more affordable clubhouse, which satisfies the language of the bond referendum while still meeting the needs of the golf course.

City Council passed a resolution on May 6, 2024, awarding a contract to Sully Construction for $68,036.42. On July 1, 2024, City Council passed a resolution for Change Order #1 for $5,235.99. The Public Works Director has signed the Statement of Completion Form stating that the project has been substantially completed in general compliance with the contract's terms, conditions, and stipulations. The final contract amount, based on actual measured quantities of work completed, is $73,272.42.

Recommendation:
City staff recommends accepting the completion of the Westwood Clubhouse Grading Project and authorizing the retainage amount of $3,663.62 to be paid to the contractor no sooner than 30 days after approval of this resolution should no claims be on file.

Matt Muckler, City Administrator

RESOLUTION 2024- _____

RESOLUTION ACCEPTING COMPLETION OF THE WESTWOOD CLUBHOUSE GRADING PROJECT

WHEREAS, on May 6, 2024, City council approved a resolution awarding a contract to Sully Construction of Sully, IA, in the amount of $68,036.42, along with a change order in the amount of $5,235.99; and

WHEREAS, Sully Construction has completed the work, and the Public Works Director has signed the Statement of Completion Form stating that the project has been substantially completed in general compliance with the terms, conditions, and stipulations of said contract; and

WHEREAS, the final contract amount, based on the issuance of one change order and actual measured quantities of work completed is $73,272.42.

NOW, THEREFORE, BE IT RESOLVED, by the City Council of the City of Newton, Iowa, that the City of Newton hereby accepts the completion of the project and authorizes the Public Works Director to execute payment of the retainer in the amount of $3,663.62 no sooner than 30 days after approval of this resolution should no claims be on file, with said payment to be made using ARPA funds.

PASSED this _____ day of August, 2024.

APPROVED this _____ day of August, 2024.

_____
Evelyn George, Mayor

ATTEST:

_____
Katrina Davis, City Clerk

City of Newton Council Report

Item:
Resolution approving the purchase of a truck and truck bed toolbox for Community Development

Summary:
Approve the purchase of a new Parks Mechanic truck from Gregg Young of Newton, Iowa, and a new toolbox from Truck Equipment of Des Moines, Iowa

Financial Impact:
Equipment purchase shall be paid utilizing $56,000.00 from General Fund Bonds, $10,000.00 from Golf Funds, and $1,765.00 from Park General Funds.

Report Number: 2024-620

Date:
August 5, 2024

Lead Department:
Community Development

Recommendation:
Approve

Background:
Staff analyzed the Parks and Recreation equipment needs in preparation for the 2024-2025 CIP and operating budget, and a mechanic truck was identified as an appropriate piece of equipment to be replaced. City Council approved the 2024-2025 Capital Improvement Plan, which included this purchase.

Three quotes were able to be secured for the mechanic truck and two quotes were secured for the toolbox. This vehicle and equipment are essential for the efficiency of the Parks Mechanic's daily operations.

Recommendation:
Staff recommends purchasing the Park's Mechanic Truck from Greg Young of Newton, Iowa, in the amount of $45,980.00, as well as the Park's Mechanic Truck toolbox, from Truck Equipment of Des Moines, Iowa, in the amount of $21,785, for a total price of $67,765.00.

Matt Muckler, City Administrator

RESOLUTION 2024- _____

RESOLUTION APPROVING THE PURCHASE OF A TRUCK AND TRUCK BED TOOLBOX FOR COMMUNITY DEVELOPMENT

WHEREAS, Staff analyzed the Parks and Recreation equipment needs in preparation for the 2024-2025 CIP and operating budget; a mechanic truck was identified as an appropriate piece of equipment to be replaced. City Council approved the 2024-2025 Capital Improvement Plan, which included this purchase; and

WHEREAS, this vehicle and equipment are essential for the efficiency of the Parks Mechanic's daily operations; and

WHEREAS, staff sought quotes for said mechanic truck and toolbox, and was able to secure three quotes:

- Greg Young $45,980.00
- Karl Chevrolet $45,141.00
- Bob Brown $46,221.00; and

WHEREAS, staff received two quotes for toolboxes that outfit this specific truck:

- Truck Equipment $21,785.00
- Hawkeye Truck Equipment $23,462.00; and

WHEREAS, City staff recommends that Council award the bid for a new mechanic truck to Greg Young of Newton, Iowa in the amount of $45,980.00, as this is within the local purchasing threshold, and;

WHEREAS, City staff recommends that Council award the bid for a new toolbox to Truck Equipment of Des Moines, Iowa, in the amount of $21,785.00

WHEREAS, City staff recommends the Council Approve the purchase of these two items for a total of $67,765.00.

NOW, THEREFORE, BE IT RESOLVED, by the City Council of Newton, Iowa, that the proposal for the purchase of a new Parks Mechanic Truck from Greg Young of Newton, Iowa, in the amount of $45,980.00, and the proposal for a new toolbox from Truck Equipment of Des Moines, Iowa, in the amount of $21,785.00 are hereby approved.

BE IT FURTHER RESOLVED, by the City Council of the City of Newton, Iowa, that the Community Development Director is authorized to process said payments in the amount of $67,765; $56,000.00 of which shall be paid from General Fund Bonds, $10,000.00 from Golf Funds, and $1,765.00 from Park General Funds.

PASSED this _____ day of August, 2024.

APPROVED this _____ day of August, 2024.

_____
Evelyn George, Mayor

ATTEST:

_____
Katrina Davis, City Clerk

City of Newton Council Report

Item:
Resolution approving the agreement with Musco Lighting for the Maytag Park Mini-Pitch Project

Report Number: 2024-751
Date:
August 5, 2024
Lead Department:
Community Development
Recommendation:
Approve

Summary:
Approve the agreement with Musco Lighting which authorizes the fabrication of the Maytag Park Mini-Pitch structure, waives all applicable permitting fees, defines the scope of work including design documents, lists the responsibilities of the customer/landowner and Musco/subcontractor, establishes a 10-year warranty, and provides other applicable project information.

Financial Impact:
N/A

Background:
Local citizens and Kick it Forward have been raising funds to install a mini-pitch court in Maytag Park for the past several months. The Newton Park Board and City Council heard presentations on the proposal and found that a mini-pitch would benefit the community. A letter of support for the fundraising effort was then approved by the City Council via Resolution 2024-049 on February 19, 2024. After significant fundraising progress was achieved, the group then returned to the Park Board and City Council to propose a specific location for the court. Council then approved Resolution 2024-155 on May 6, 2024, which approved the proposed location of the court (subject to additional review) and the donation agreement.

Public Works staff then prepared plans and specifications for constructing a new concrete pad to establish a defect-free surface meeting the suggested specifications for a mini-pitch court at the approved location. Public Works then sought bids from numerous contractors in central Iowa, and bids were received on May 13, 2024. City Council then approved Resolution 2024-182 on May 20, 2024, which awarded the contract for the mini-pitch PCC pad project. Said project was completed promptly, and the City Council approved Resolution 2024-229 on July 1, 2024, which accepted the completion of the project.

Fundraising is nearly complete, and the project is ready to move forward. Musco Lighting has provided this agreement to authorize the fabrication and subsequent installation of the mini-pitch structure and lighting components at Maytag Park. As per the proposal, the specific design of the court includes sponsor logos for the following private entities: Wallace Family Funeral Home, Delta Dental, Iowa Speedway, and FNNB. Delivery is estimated to occur between 10–12 weeks after acceptance of this proposal.

Recommendation:
Staff recommends approval of this resolution.

Matt Muckler, City Administrator

RESOLUTION 2024- _____

RESOLUTION APPROVING THE AGREEMENT WITH MUSCO LIGHTING FOR THE MAYTAG PARK MINI-PITCH PROJECT

WHEREAS, local citizens and Kick it Forward have been raising funds to install a mini-pitch court in Maytag Park for the past several months; and

WHEREAS, the Newton Park Board and City Council heard presentations on the proposal and found that a mini-pitch would benefit the community. A letter of support for the fundraising effort was then approved by the City Council via Resolution 2024-049 on February 19, 2024; and

WHEREAS, after significant fundraising progress was achieved, the group then returned to the Park Board and City Council to propose a specific location for the court. Council then approved Resolution 2024-155 on May 6, 2024, which approved the proposed location of the court (subject to additional review) and the donation agreement; and

WHEREAS, Public Works staff then prepared plans and specifications for constructing a new concrete pad to establish a defect-free surface meeting the suggested specifications for a mini-pitch court at the approved location. Public Works then sought bids from numerous contractors in central Iowa, and bids were received on May 13, 2024. City Council then approved Resolution 2024-182 on May 20, 2024, which awarded the contract for the mini-pitch PCC pad project. Said project was completed promptly, and the City Council approved Resolution 2024-229 on July 1, 2024, which accepted the completion of the project.

WHEREAS, fundraising is nearly complete, and the project is ready to move forward. Musco Lighting has provided this proposal to authorize the fabrication and subsequent installation of the mini-pitch structure and lighting components at Maytag Park. As per the proposal, the specific design of the court includes sponsor logos for the following private entities: Wallace Family Funeral Home, Delta Dental, Iowa Speedway, and FNNB. Delivery is estimated to occur between 10–12 weeks after acceptance of this proposal.

NOW, THEREFORE, BE IT RESOLVED, by the City Council of Newton, Iowa, that the Mayor is hereby directed to execute the agreement with Musco Sports Lighting, LLC which authorizes the fabrication of the Maytag Park Mini-Pitch structure, waives all applicable permitting fees, defines the scope of work including design documents, lists the responsibilities of the customer/landowner and Musco/subcontractor, establishes a 10-year warranty, and provides other applicable project information, is hereby approved.

PASSED this _____ day of August, 2024.

APPROVED this _____ day of August, 2024.

_____
Evelyn George, Mayor

ATTEST:

_____
Katrina Davis, City Clerk

MUSCO LIGHTING PROPOSAL
PREPARED FOR

Maytag Park Mini-Pitch

LED Lighting Project
Newton, IA
June 17, 2024

Project # 233984

SUBMITTED BY

Musco Sports Lighting, LLC

100 1st Avenue West
P.O. Box 808
Oskaloosa, IA 52577
Phone: 800.825.6030
Phone: 641.673.0411
Fax: 641.673.4852

We Make It Happen.

This information is provided by Musco exclusively for this project. Reproduction or distribution of the enclosed documents or information without the written permission of Musco Sports Lighting, LLC is prohibited.
M-1164-enUS-8

A. SUBMITTAL APPROVAL
Approval Letter
Bill of Materials
Scope of Work

B. LIGHTING DESIGN
Drawing # WA050104-GXAF-XX_B

C. CONCEPT DRAWING
Drawing #233984X1, dated 30-Apr-24

D. PRODUCT INFORMATION
TLC-LED-550 Luminaire and Driver Datasheet
Mini-Pitch System™ Modular Sports Solution Datasheet

E. SURFACE DESIGN

F. WARRANTY
Musco 10-Year Warranty

G. DELIVERY

ITEM A

Project Submittal: **Approval**

Date: July 17, 2024

Project: Maytag Park Mini-Pitch
Project No: 233984

This serves as approval for submittals provided by Musco Sports Lighting, LLC. Please review the enclosed documents and note changes where appropriate. Upon your approval, we can begin fabrication of the materials for your project. Any changes may result in delay of production, delivery, and additional costs.

Please confirm the following information of this submittal:

Items to Confirm:	Project Information:	Check to Confirm:
Structure Size:	**50'x104' (44'x98' playing area)**	
Electrical Details:	**Input Voltage: 208V, single phase; Control voltage: 120V**	
Signs:	**(16)**	
Surface:	**Concrete** **Estimated Pour Date:**	
Surface (new):	**Tiles**	
Delivery:	**Musco shall deliver equipment to job site 10-12 weeks after submittal approval.** ***Please note delivery timing may be affected by variables such as weather, production schedules, and completion of new pad.***	

Please indicate your approval of this submittal in its entirety by signing below:

Authorized Signature

Date

The City of Newton

Printed Name

Company Name

Authorized Signature

Date

Kick It Forward

Printed Name

Company Name

Bill of Materials

Maytag Park Mini-Pitch
Newton, IA
June 10 2024

Bill of Materials

Musco's Mini-Pitch System™ Modular Sports Solution as described below, and delivered to the job site:

(1)**– 50' x 104' Mini-Pitch System™**

System Description – Mini-Pitch System™ Modular Sports Solution with TLC for LED® technology

- Galvanized steel pole, fence panels, and structure
- Built-in goals
- Factory aimed and assembled TLC for LED® luminaires
- Remote electrical component enclosures
- Pole length wire harnesses
- Seating accommodations and cupholders
- Lockable storage
- Signs
- Tile surface

On Field Performance – control to benefit players and spectators

- Light is directed onto the surface, allowing for enhanced visibility
- Control-Link® control system for remote on/off control

Environmental Light Control – control for neighbors and the environment

- Reduction of spill light and glare by 50% or more

Always Ready to Play – control assuring the results you expect

- Product assurance and warranty program that includes materials and onsite labor, eliminating 100% of your maintenance costs for 10 years

---

Thank you for considering our Team for your modular sports solution needs. Please contact us with any questions.

Araceli Angel, Business Development Representative – Mini-Pitch
Phone: 641-670-0440
E-mail: araceli.angel@musco.com

Project # 233984

Scope of Work

Project Name: Maytag Patk Mini-Pitch

Site Address: 301 South 11th Ave W, Newton, IA 50208

Project Number: 233984

Requested Completion Date: ☐ Not Applicable

Contact Information

DECISION MAKER: Nick Cummins Parks Operations Superintendent City of Newton Email: nickc@newtongov.org Phone: 641-521-6881	**ON-SITE CONTACT:** Nick Cummins Parks Operations Superintendent City of Newton Email: nickc@newtongov.org Phone: 641-521-6881
WARRANTY CONTACT: Nick Cummins Parks Operations Superintendent City of Newton Email: nickc@newtongov.org Phone: 641-521-6881	**CONTROL-LINK CONTACT:** Jamie Murphy Parks Operations Assistant Superintendent City of Newton Email: jamiem@newtongov.org Phone: 641-792-6622 ex.2315 ****Nick Cummins secondary Contact for Control Link**
SALES REP CONTACT: Araceli Angel Business Development Representative Musco Sports Lighting Email: Araceli.angel@musco.com Phone: 641-670-0440	**SUBCONTRACTOR CONTACT:** Enter Contact Name Enter Contact Title Enter Contact Company Email: Enter Contact Email Phone: Enter Contact Phone
PROJECT MANAGER: Joe Weiner Musco Sports Lighting, LLC Email: joe.weiner@musco.com Phone: 641-638-4088	**PROJECT COORDINATOR:** Holly Swim Musco Sports Lighting, LLC Email: holly.swim@musco.com Phone: 641-660-3628

Number of Mini-Pitches

Number of Mini-Pitches to Be Installed: 1

Scope of Work

Mini-Pitch Number 1

Size of Mini-Pitch: 50x104

Attach photos of existing surface, including cracking.

NEW CONCRETE PAD

Poured by **END** of July

Scope of Work

Attach an aerial photo of the site and surrounding neighborhood with markings for exactly where the mini-pitch is going below. Make sure to also indicate which side the light pole will be located.

It is assumed North is the top of the photo unless otherwise indicated.

Pole will sit on the **EAST** facing the WEST

Scope of Work

Truck Entry

Parks Department Stated they’ve gotten trucks in and out of the park.

Scope of Work

Logos and Colors Layout Detail

<u>*All logos need to be vector files and sized appropriately!</u>

- All sign logos will need to be center oriented
- Please send appropriately sized vector files to the project manager and project coordinator.
    - Also send a jpeg/pdf of each logo (so all computers can open files for reference)

Attach image to show logos, line orientation, and colors. Also indicate the orientation of the design to either the property line or the light pole.

(Image does not need to be to scale but logos do need to be shown in the correct location.)

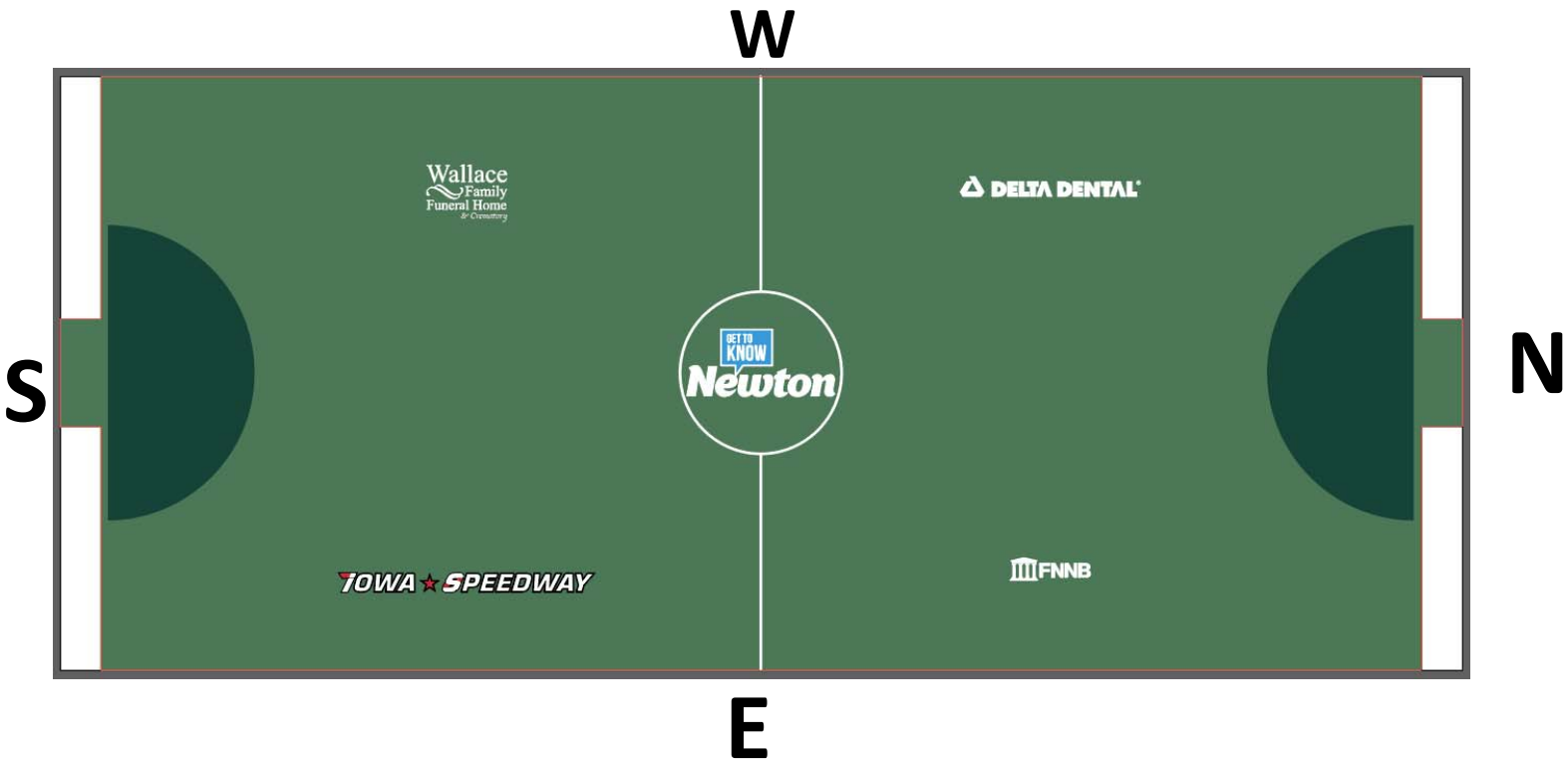

If logos need to be specifically located, please provide measurements below.

Newton logo in the center

Delta Dental top right of center logo

FNNB bottom right of center logo

Wall Family Funeral Home top left of center logo

Iowa Speedway bottom left of center logo

N

W

E

Light pole

S

Scope of Work

Surfacing

Game Lines

- Game lines are white and 2” wide
- Goal lines are 6” in from the goal line wall
- Sidelines are 3’ in from the sideline wall
- Goal crease is an 11’ radius with the center point located on the goal line and centered on the goal
- Center circle is a 12’ Diameter

Additional information regarding game lines for this project:

Only one white center line and circle

Surface Colors (Click link below for list of available colors)

☐ Tiles: https://www.snapsports.com/athletic-surface-outdoor-revolution/

Primary Color: Dark Green

Secondary Color: Light Green

Signs

Are sideline signs requested for this pitch? ☐ Yes

Quantity of Signs: 16

If specific sign layout is required, please specify: **N/A**

Scope of Work

Customer/Landowner Responsibilities

General:

1. Provide complete access to the site for construction utilizing 2-wheel drive rubber tire equipment.
2. Locate existing underground utilities not covered by your local utilities. (i.e., water lines, electrical lines, irrigation systems, and sprinkler heads). Musco or subcontractor will not be responsible for repairs to unmarked utilities.
3. Locate and mark either the center or the corners of Mini-Pitch System™ per Musco supplied layout drawing.
4. Pay any power company fees and requirements.
5. Provide electrical service and distribution panel capable of handling electrical requirements of Mini-Pitch System™
6. Provide either a concrete or asphalt pad according to the requirements of corresponding Mini-Pitch System™.
7. Provide an area on site for disposal of packaging material (i.e., pallets, wood cribbing, and cardboard boxes) unless determined that Musco's subcontractor(s) will haul packing materials off-site.
8. Pay all permitting fees and obtain any required electrical or structural permits.

Electrical:

1. Provide a 120-volt control circuit as required on the concept drawing.
2. Provide a lighting circuit as required on the concept drawing.
3. Commission Control-Link® by contacting Control-Link Central™ at 877-347-3319.

Musco/Subcontractor Responsibilities:

1. Provide a complete Mini-Pitch System™
2. Provide concept and assembly drawings.
3. Provide an aiming drawing if lights are included.
4. Provide minimum specifications for pad based on the type of surface to be applied.
5. Provide Project Management as required.
6. Provide stamped design drawing as required.
7. Assist our installing subcontractor(s) and ensure our responsibilities are satisfied.

General:

1. Provide storage containers for materials (including electrical components enclosures) as needed.
2. Provide necessary waste disposal and daily cleanup.
3. Provide adequate security to protect delivered products from theft, vandalism, or damage during the installation.
4. Confirm the existing underground utilities and irrigation systems have been located and are clearly marked in order to avoid damage from construction equipment. Repair any such damage during construction.

5. Limit heavy equipment travel on grass areas when possible—repair damage to grounds which exceeds that which would be normally expected. Indentations caused by heavy equipment traveling over dry ground would be an example of expected damage. Ruts and sod damage caused by equipment traveling over wet grounds would be an example of damage requiring repair.
6. Commence installation upon delivery and proceed without interruption until complete. Notify Musco immediately of any breaks in schedule or delays.
7. Dispose of hazardous materials in an approved manner.
8. Remove packaging material
9. Send photos of completed mini-pitch to minipitch.pics@musco.com.

Mini-Pitch System™ Installation:

1. Provide labor and all equipment to offload Mini-Pitch System™ at job site per scheduled delivery.
2. Provide labor, materials, and equipment to install Mini-Pitch System™ as specified by the assembly drawing.
3. Mark and confirm Mini-Pitch System™ location per drawing (or specifications) provided. If there are any issues, immediately notify your Musco Project Manager.

Surface:

1. Provide labor, materials, and equipment to install surface and logos.
2. Clean, prepare, and repair surface according to the specifications of chosen products.
3. Send photos of completed mini-pitch to minipitch.pics@musco.com.

Scope of Work

Additional Project Information

Additional Project Notes:

****Pictures of completed projects need to be sent to minipitch.pics@musco.com.****

Person Submitting: Araceli Angel

Date Submitted: 7/16/24

ITEM B

Maytag Park Mini-Pitch

Newton, IA

NOTES: Input Files:
WA050104-GAAF-XX_B: Asphalt
WA050104-GCAF-XX_B: Concrete

Lighting System

Pole / Fixture Summary

Pole ID	Pole Height	Mtg Height	Fixture Qty	Luminaire Type	Load	Circuit
P1	24'	24'	2	TLC-LED-550	1.08 kW	A
1			***2***		***1.08 kW***	

Circuit Summary

Circuit	Description	Load	Fixture Qty
A	Mini-Pitch	1.08 kW	2

Fixture Type Summary

Type	Source	Wattage	Lumens	L90	L80	L70	Quantity
TLC-LED-550	LED 5700K - 75 CRI	540W	67,000	>120,000	>120,000	>120,000	2

Light Level Summary

Calculation Grid Summary

Grid Name	Calculation Metric	Illumination					Circuits	Fixture Qty
		Ave	Min	Max	Max/Min	Ave/Min		
Mini-Pitch (104' x 50')	Horizontal Illuminance	22.2	5	49	9.49	4.43	A	2

From Hometown to Professional

We Make It Happen.

Not to be reproduced in whole or part without the written consent of Musco Sports Lighting, LLC. ©1981, 2020 Musco Sports Lighting, LLC.

EQUIPMENT LIST FOR AREAS SHOWN

Pole				Luminaires				
QTY	LOCATION	SIZE	GRADE ELEVATION	MOUNTING HEIGHT	LUMINAIRE TYPE	QTY / POLE	THIS GRID	OTHER GRIDS
1	P1	24'	-	24'	TLC-LED-550	2	2	0
1	TOTALS					2	2	0

Maytag Park Mini-Pitch

Newton, IA

GRID SUMMARY

Name:	**Mini-Pitch (104' x 50')**
Size:	98' x 44'
Spacing:	10.0' x 10.0'
Height:	3.0' above grade

ILLUMINATION SUMMARY

MAINTAINED HORIZONTAL FOOTCANDLES	
	Entire Grid
Scan Average:	**22.17**
Maximum:	49
Minimum:	5
Avg / Min:	4.33
Max / Min:	**9.49**
UG (adjacent pts):	2.42
No. of Points:	40
LUMINAIRE INFORMATION	
Applied Circuits:	A
No. of Luminaires:	**2**
Total Load:	1.08 kW

Guaranteed Performance: The ILLUMINATION described above includes a 0.95 dirt depreciation factor.

Field Measurements: Individual field measurements may vary from computer-calculated predictions and should be taken in accordance with IESNA RP-6-15.

Electrical System Requirements: Refer to Amperage Draw Chart and/or the **"Musco Control System Summary"** for electrical sizing.

Installation Requirements: Results assume ± 3% nominal voltage at line side of the driver and structures located within 3 feet (1m) of design locations.

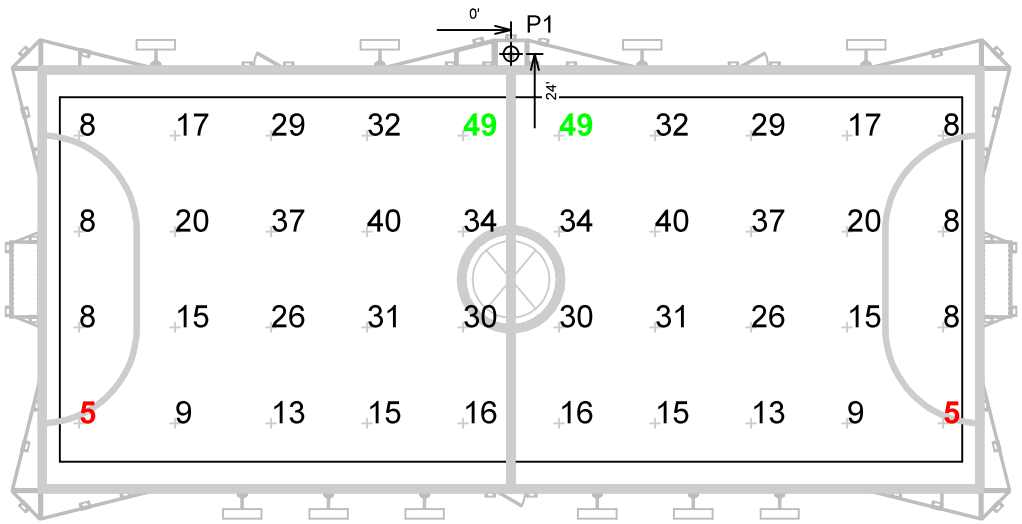

NOTES: Input Files:

WA050104-GAAF-XX_B: Asphalt
WA050104-GCAF-XX_B: Concrete

SCALE IN FEET 1 : 20

0' 20' 40'

Pole location(s) ⊕ dimensions are relative to 0,0 reference point(s) ⊗

ENGINEERED DESIGN File #WA050104-GXAF-XX_B

We Make It Happen.

Not to be reproduced in whole or part without the written consent of Musco Sports Lighting, LLC. ©1981, 2020 Musco Sports Lighting, LLC.

NOTES: Input Files:

WA050104-GAAF-XX_B: Asphalt
WA050104-GCAF-XX_B: Concrete

Maytag Park Mini-Pitch

Newton, IA

EQUIPMENT LAYOUT

INCLUDES:
· Mini-Pitch (104' x 50')

Electrical System Requirements: Refer to Amperage Draw Chart and/or the **"Musco Control System Summary"** for electrical sizing.

Installation Requirements: Results assume ± 3% nominal voltage at line side of the driver and structures located within 3 feet (1m) of design locations.

EQUIPMENT LIST FOR AREAS SHOWN

Pole				Luminaires		
QTY	LOCATION	SIZE	GRADE ELEVATION	MOUNTING HEIGHT	LUMINAIRE TYPE	QTY / POLE
1	P1	24'	-	24'	TLC-LED-550	2
1	TOTALS					2

SINGLE LUMINAIRE AMPERAGE DRAW CHART

Ballast Specifications (.90 min power factor)	Line Amperage Per Luminaire (max draw)						
Single Phase Voltage	208 (60)	220 (60)	240 (60)	277 (60)	347 (60)	380 (60)	480 (60)
TLC-LED-550	3.2	3.0	2.8	2.4	1.9	1.8	1.4

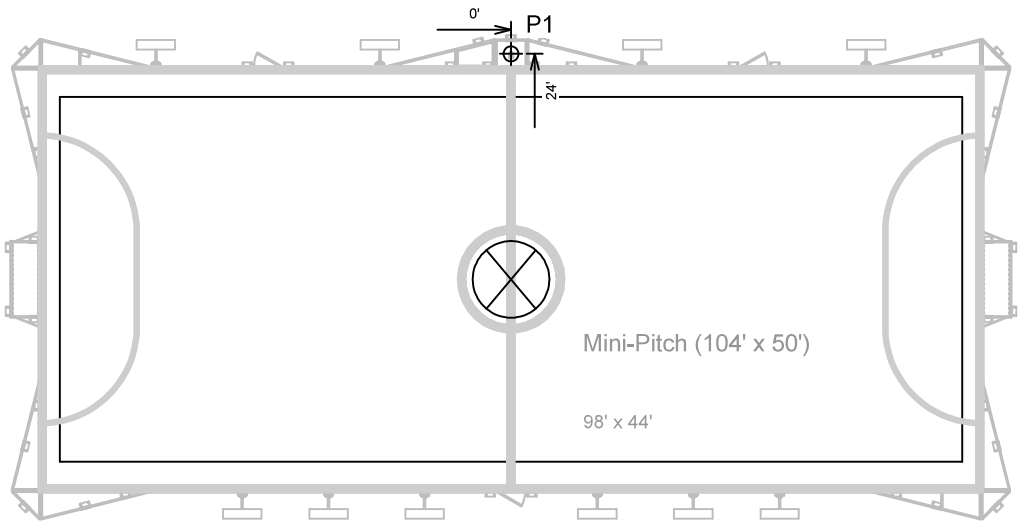

SCALE IN FEET 1 : 20

0' 20' 40'

Pole location(s) ⊕ dimensions are relative to 0,0 reference point(s) ⊗

ENGINEERED DESIGN File #WA050104-GXAF-XX_B

We Make It Happen.

Not to be reproduced in whole or part without the written consent of Musco Sports Lighting, LLC. ©1981, 2020 Musco Sports Lighting, LLC.

ITEM C

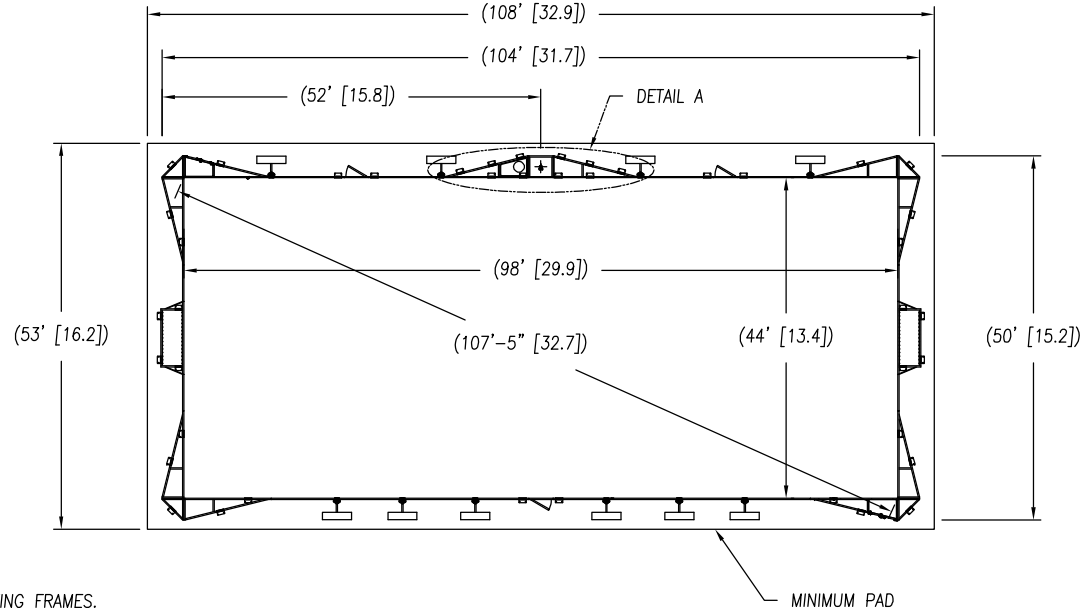

NOTES:

1. SPECIFICATIONS FOR ALL HARDWARE CONNECTING FRAMES.
   SIZE: 1/2-13
   MATERIAL: GRADE 1 STEEL OR BETTER.
   FINISH: HOT DIP GALVANIZED C CLASS
2. GROUND ANCHOR SPECIFICATIONS. 122 ANCHORS ARE USED FOR THIS FIELD SIZE.
   ASPHALT SURFACE:
   TYPICAL PULL RESISTANCE: 2,500 LBS
   TYPICAL SHEAR RESISTANCE: 2,500 LBS
   2000 PSI CONCRETE SURFACE:
   TYPICAL PULL RESISTANCE: 2,999 LBS
   TYPICAL SHEAR RESISTANCE: 5,564 LBS
3. WIND LOADING LIMITS:
   NO BANNERS ON STRUCTURE
   IBC 2015 175 MPH EXPOSURE C
   BANNERS MOUNTED ON ALL SURFACES
   IBC 2015 120 MPH EXPOSURE C

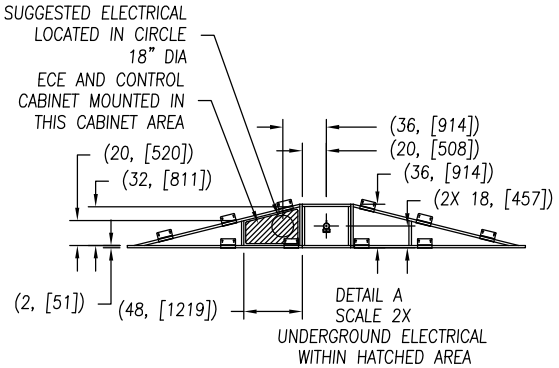

ELECTRICAL NOTES: TBC

PROJECT VOLTAGE: 208

CONTROL VOLTAGE: 120

SURFACE TYPE: CONCRETE

MINIMUM PAD SURFACE: 108' X 53'
32.9M X 16.2M

DWG REF: SBS-300

ENGINEERING REFERENCE DOCUMENT
DO NOT USE TO MANUFACTURE PRODUCT
ENG_REF_DOC_A

Information contained herein is the confidential property of Musco Sports Lighting, LLC and/or its parent companies, affiliates, successors and assigns. Reproduction, distribution, or use of the information other than its limited, intended purpose without express written permission is prohibited.

3RD ANGLE PROJECTION
ASME Y14.5M-1994

Maytag Park Mini-Pitch
Newton, IA
MINI PITCH, 104' X 50' (31.7 X 15.2) B

musco Lighting
CORPORATE OFFICE:
P.O. Box 808
100 1st Avenue West
Oskaloosa, Iowa 52577
+1-800-825-6020
+1-641-673-0411

DATE:	BY: R.L.	REVISIONS:

JOB NUMBER:
DRAWN BY:
CHECK BY:
REPRESENTATIVE:
SCALE: 1/200
DATE: 30-Apr-2024
DRAWING NUMBER: 233984X1
1 OF 1 SHEETS

ITEM D

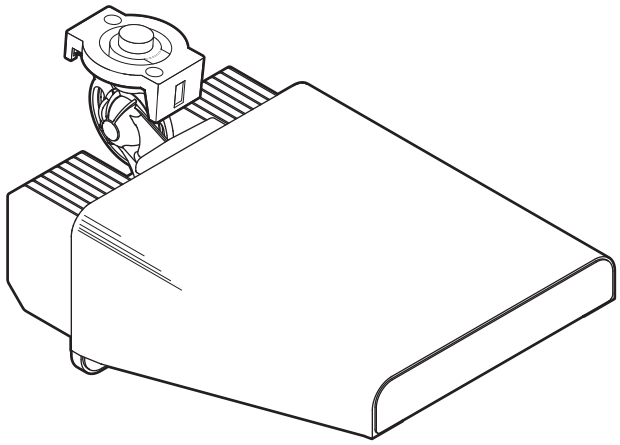

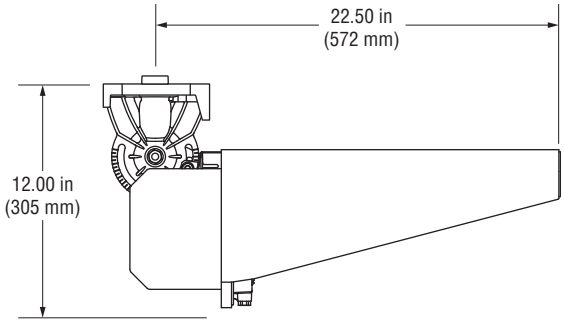

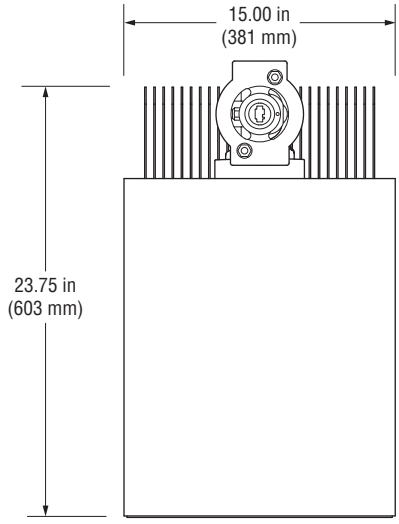

Luminaire Data

Weight (luminaire)	25 lb (11 kg)
UL listing number	E338094
UL listed for USA / Canada	UL1598 CSA-C22.2 No.250.0
CE Declaration	LVD, EMC, RoHS
Ingress protection, luminaire	(pending) IP65
Impact rating	IK07
Material and finish	Aluminum, powder-coat painted
Wind speed rating (aiming only)	150 mi/h (67 m/s)
UL, IEC ambient temperature rating, luminaire	(pending) 50°C (122°F)

Photometric Characteristics

Projected lumen maintenance per IES TM-21-11	
L90 (20k)	>120,000 h
L80 (20k)	>120,000 h
L70 (20k)	>120,000 h
Lumens[1]	67,000
CIE correlated color temperature	5700 K
Color rendering index (CRI)	75 typ, 70 min
LED binning tolerance	7-step MacAdam Ellipse

Footnotes:

1) Incorporates appropriate dirt depreciation factor for life of luminaire.

Driver Data

Electrical Data

Rated wattage[1]	
Per driver	1080 W
Per luminaire	540 W
Number of luminaires per driver	2
Starting (inrush) current	<40 A, 256 µs
Fuse rating	15 A
UL, IEC ambient temperature rating, electrical components enclosure	(pending) 50°C (122°F)
Ingress protection, electrical components enclosure	IP54
Efficiency	95%
Dimming mode	optional
Range, energy consumption	15 - 100%
Range, light output	20 - 100%
Flicker	<2%
Total harmonic distortion (THD) at full output	<20%

Typical Wiring

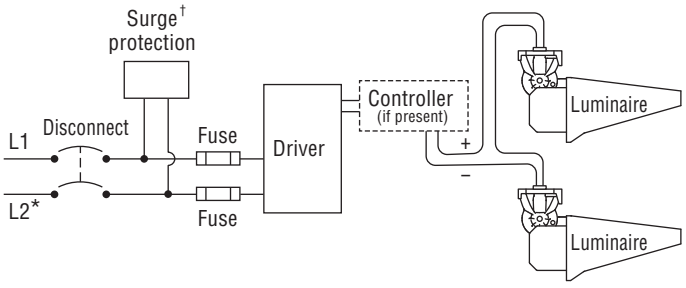

* If L2 (com) is neutral then not switched or fused.
† Not present if indoor installation.

	200 Vac 50/60 Hz	208 Vac 60 Hz	220 Vac 50/60 Hz	230 Vac 50 Hz	240 Vac 50/60 Hz	277 Vac 60 Hz	347 Vac 60 Hz	380 Vac 50/60 Hz	400 Vac 50 Hz	415 Vac 50 Hz	480 Vac 60 Hz
Max operating current per luminaire[2]	3.32 A	3.19 A	3.02 A	2.89 A	2.77 A	2.40 A	1.92 A	1.75 A	1.66 A	1.60 A	1.39 A

Footnotes:

1) Rated wattage is the power consumption, including driver efficiency losses, at stabilized operation in 25°C ambient temperature environment.

2) Operating current includes allowance for 0.90 minimum power factor, operating temperature, and LED light source manufacturing tolerances.

Notes

1. Use thermal magnetic HID-rated or D-curve circuit breakers.
2. See *Musco Control System Summary* for circuit information.

Datasheet: **Mini-Pitch System™ Modular Sports Solution**

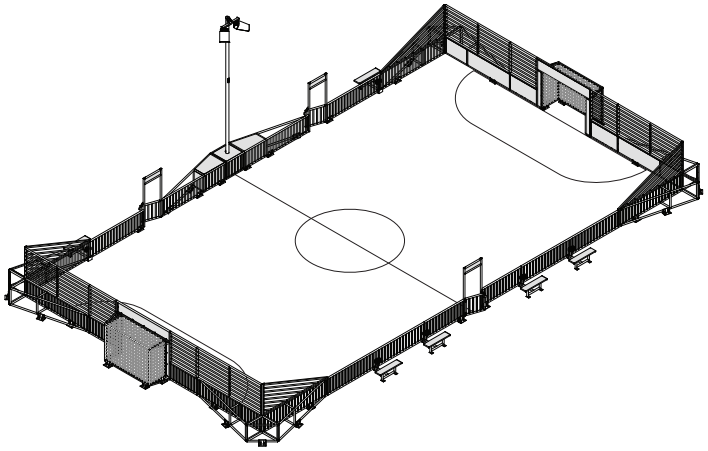

Overview

Mini-Pitch System™ modular sports solution includes everything needed to transform an underutilized area into a fully-equipped soccer pitch. The modular system includes lighting, fencing, goals, benches, ADA-compliant access, and lockable storage.

Features

Structure

- Designed and manufactured as a system
- All components prefabricated for bolt-together construction
- Pitch structure, crossarms, and pole shaft are hot-dip galvanized inside and outside after fabrication to meet ASTM-A123 and EN 1461 standards
- Engineered anchor system and hardware provided — all units are approved for 175 mi/h (78 m/s) winds without signage, 120 mi/h (54 m/s) with signage
- ADA compliant entry points with latching gates provided on each side of pitch
- Seating, cupholders, and 20 ft^3 (0.566 m^3) of lockable storage incorporated in structure

Lighting

- Designed and manufactured as a system including TLC for LED® luminaires, structural components, and complete electrical system including grounding and surge suppression
- All luminaires and electrical components enclosures factory assembled, aimed, wired, and tested
- Luminaires and mounting components withstand up to 150 mi/h (67 m/s) windspeed without misalignment

Control-Link® Service

- Instant on/off control or scheduled operation up to 10 years in advance
- Control-Link Central™ service center provides scheduling and support 24 hours a day, 7 days a week
- Customized usage reports through website

Warranty and Support

- 10-year warranty covers the complete system so your pitch is always ready for play

©2022 Musco Sports Lighting, LLC · All trademarks are property of Musco Corporation.
One or more of the following patents may apply: United States Patent: 10920437. U.S. and foreign patents pending. · M-3865-en04-2

Technical Specifications

Goals

Net material . . . . . 0.19 in (4 mm) galvanized chain link

Frame construction . . . . . 0.12 in (3 mm) hot-dip galvanized steel tubing and channel

Panel material . . . . . 0.105 in (2.67 mm) powder-coated galvanized steel plate

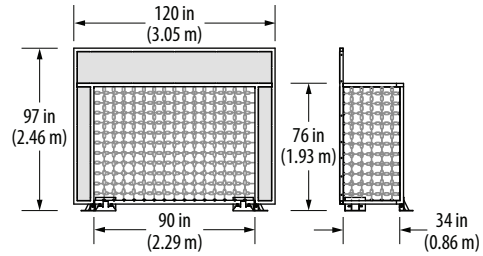

Structure

Frame material. . . . . 2 in (50 mm) square steel tube

Picket material . . . . . .0.12 in (3 mm) steel channel

Cabinet material . . . . . 0.105 in (2.67 mm) steel plate

Finish. . . . . Hot-dip galvanized

Construction. . . . . Prefabricated sections bolt-together assembly

Bench dimensions . . . . . 11.5 in (292 mm) x 4 ft (1.22 m)
Bench quantity varies see pitch configurations for details

Bench material. . . . . .0.078 in (1.98 mm) anodized aluminum

Lockable storage capacity . . . . . .20 ft^3 (0.566 m^3)

Wind speed rating (structure) . . . . . .175 mi/h (78 m/s)
IBC 2015 exposure C
120 mi/h (54 m/s) with signage

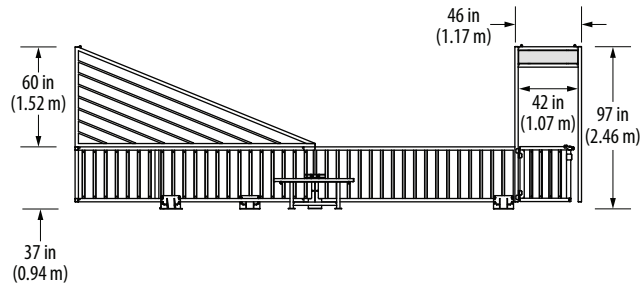

Anchor System

Concrete Surface

Anchor type . . . . . 5.5 in (140 mm) galvanized wedge

Pull rating per anchor . . . . . .2000 lb (907 kg)

Asphalt Surface

Anchor type . . . . . .12 in (305 mm) grout embedded

Pull rating per anchor . . . . . 2999 lb (1360 kg)

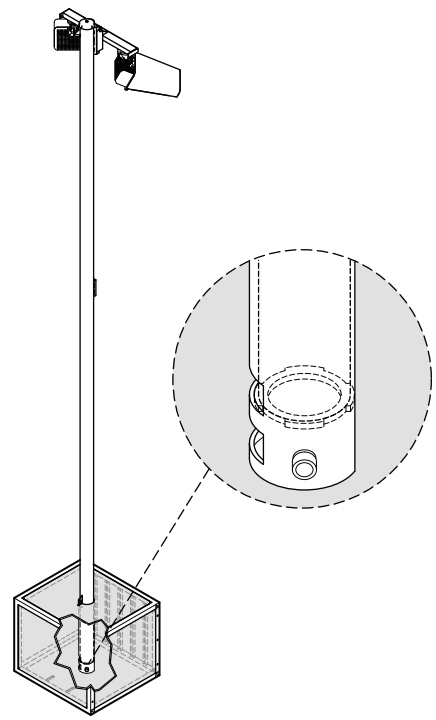

Lighting

Luminaires per pitch . . . . . .Qty 2 TLC-LED-550
See luminaire datasheet for details

Aiming . . . . . .Factory aimed 0.2° accuracy

Wind speed rating (aiming only). . . . . .150 mi/h (67 m/s)

Pole and crossarm material. . . . . Hot-dip galvanized steel

Lifting eye . . . . . .Integral

Pole support. . . . . .Anchored frame structure

Wind speed rating (pole) . . . . . .175 mi/h (78 m/s)
IBC 2015 exposure C

©2022 Musco Sports Lighting, LLC · All trademarks are property of Musco Corporation.
One or more of the following patents may apply: United States Patent: 10920437. U.S. and foreign patents pending. · M-3865-en04-2

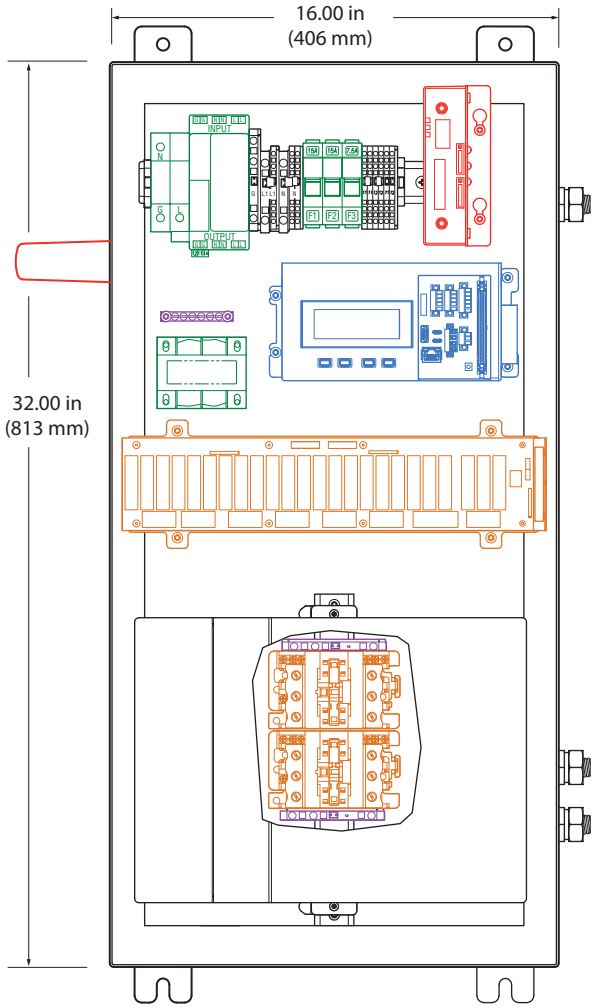

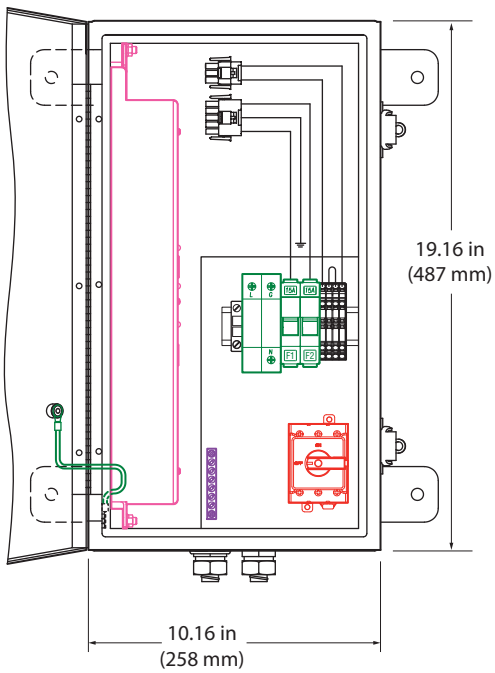

Control-Link® Control System and Electrical Components Enclosure

- Factory wired, programmed, and tested
- Internally fused
- Control power terminal blocks provided

Control Module

Receives and stores schedules from Control-Link Central™ service center, operates your equipment, and verifies schedules are carried out.

- Executes scheduled on/off events
- Stores schedules for up to 7 days
- Automatic recovery mode to current lighting schedule in the event of power interruption or loss

Communication Modules

Communication with Control-Link Central via integrated, high speed, cellular connection with no additional monthly charges during the warranty period.

I/O Board and Contactor Modules

Switches equipment based on control module schedules.

- Compliant with IEC 60947-4-1 for continuous operation at 100% of rated current
- Contactors rated for 30 A

Circuit Protection

- 50kA Surge protection
- Internally fused

Ground Bar

Provides integral ground bar for lighting equipment grounding.

Remote Driver

- Easy access for maintenance
- Isolated from luminaires for improved thermal performance

Disconnect Switch

- Disconnects power at electrical components enclosure
- Supports lock-out/tag-out procedures

©2022 Musco Sports Lighting, LLC · All trademarks are property of Musco Corporation.
One or more of the following patents may apply: United States Patent: 10920437. U.S. and foreign patents pending. · M-3865-en04-2

Pitch Configurations

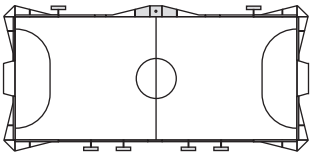

40 ft x 84 ft
12 m x 25 m

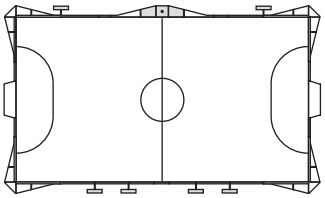

50 ft x 84 ft
15 m x 25 m

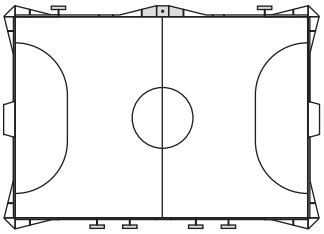

60 ft x 84 ft
18 m x 25 m

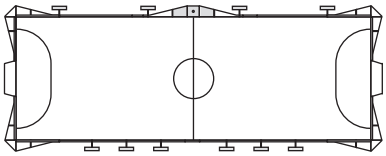

40 ft x 104 ft
12 m x 32 m

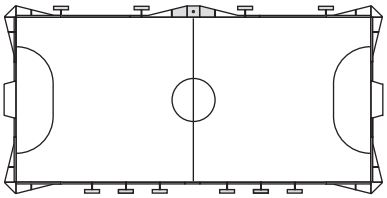

50 ft x 104 ft
15 m x 32 m

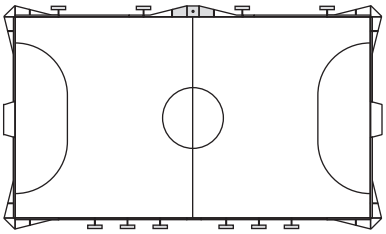

60 ft x 104 ft
18 m x 32 m

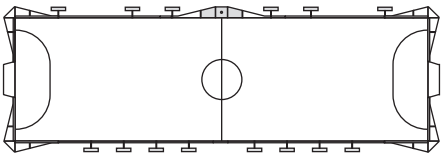

40 ft x 120 ft
12 m x 36 m

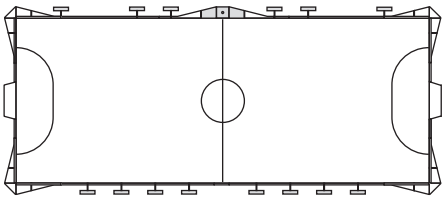

50 ft x 120 ft
15 m x 36 m

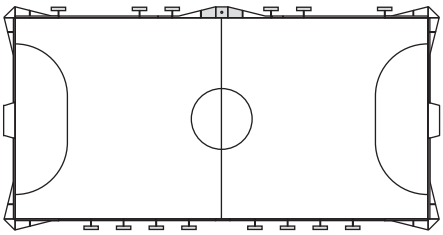

60 ft x 120 ft
18 m x 36 m

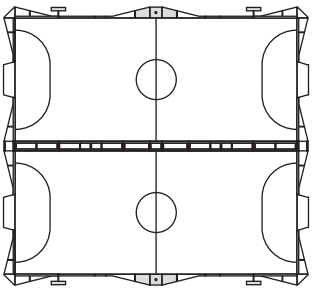

76 ft x 84 ft
23 m x 25 m

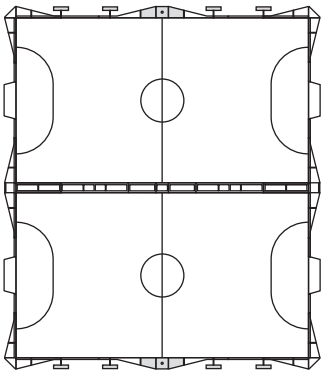

96 ft x 104 ft
29 m x 32 m

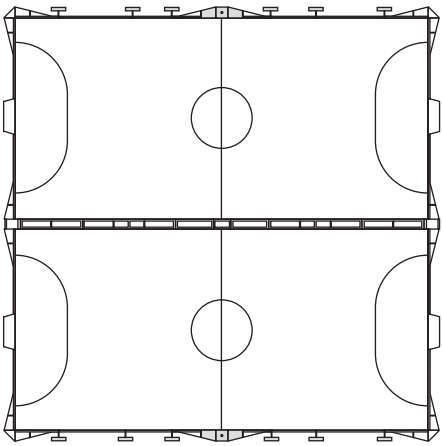

116 ft x 120 ft
35 m x 36 m

*Note: Double pitch available in all optional sizes.

©2022 Musco Sports Lighting, LLC · All trademarks are property of Musco Corporation.
One or more of the following patents may apply: United States Patent: 10920437. U.S. and foreign patents pending. · M-3865-en04-2

ITEM E

Wallace Family Funeral Home & Crematory

DELTA DENTAL®

GET TO KNOW Newton

IOWA SPEEDWAY

FNNB

ITEM F

Musco 10 Year Warranty

10-Year Product Assurance & Warranty Program

Project name:_____ **Project number:** _____

Owner: _____

City:_____ **State:**_____

Covered product(s) Mini-Pitch System™ modular sports solution with TLC for LED® luminaires

Date issued: _____ **Expiration:** _____

Musco Sports Lighting, LLC will provide all materials and labor to maintain operation of your Mini-Pitch System™ modular sports solution to original design criteria for 10 years. Musco products and services are guaranteed to perform on your project as detailed in this document.

Structural Integrity

Your Mini-Pitch System modular sports solution has been designed to meet or exceed local building codes and resist corrosion. Structural integrity of the system including fence panels, goals, seating, and light poles is guaranteed for the warranty period.

Light Performance

Luminaire outages that occur during the warranty and maintenance period will be repaired or replaced.

Control Services

On-off control of your lighting system is provided via an easy-to-use web site scheduling system, smartphone app, phone, or email. Our trained Control-Link Central™ service center team is available 24/7/365. Regular usage reports are always available on Control-Link Central's web site.

Musco has a team to ensure fulfillment of our product and services warranty and maintains financial reserves dedicated to support our fulfillment of this warranty. Please keep this document as your signed contract guaranteeing comprehensive service for the 10 year period.

Sample

©2020 Musco Sports Lighting, LLC · M-3924-enUS-1

Musco 10 Year Warranty

10-Year Product Assurance & Warranty Program

Terms and Conditions

Musco Sports Lighting, LLC ("Musco") or an authorized servicer shall furnish labor and parts necessary to restore operation of Covered Product(s) to original design criteria provided the failure was a result of normal usage.

This Contract covers Mini-Pitch System™ modular sports solution with Control-Link®, TLC for LED®, and any additional Musco manufactured product as listed on page 1. "We", "us," and "our" mean Musco. "You" and "your" mean the purchaser of the Covered Product(s).

This Contract cannot be changed without the prior written approval of Musco. If there is a conflict between the terms of this Contract and information communicated either orally or in writing by one or more of our employees or agents, this Contract shall control.

Additional Provisions

1. **Availability of Service:**
   a. Control-Link Central™ operators are available 24/7 via web site, phone, fax, or email.
   b. Maintenance service specialists are currently available 8AM to 5PM Central Time Monday through Friday, except for national holidays. Services shall be rendered during these same hours in your local time zone.
2. **Determination of Repairs:** Musco will utilize any information provided by the facility owner to determine any needed repair and/or replacement of Covered Product(s) and parts. Repair will be with Product(s) of like kind and quality.
3. **Your Requirements Under this Contract:** You agree to meet and maintain all electrical requirements (if any) and install as specified by Musco or as approved in advance by Musco's Warranty Department.
4. **Service Limitations:** Musco will exercise all reasonable efforts to perform service under this Contract but will not be responsible for delays or failure in performing such services due to causes beyond its control.

This Contract does not cover maintenance, repair, or replacement due to damage from:

a. External causes such as but not limited to misuse, vandalism, or unauthorized repairs or modifications. (Unauthorized repairs or modifications void this warranty in its entirety.)
b. Failure of any non-Musco equipment or electrical systems.
c. Acts of nature such as but not limited to weather events or lightning.

5. **Contract Limitations:**
   a. EXCLUSIONS FROM COVERAGE: IN NO EVENT WILL MUSCO BE LIABLE FOR ANY SPECIAL, INDIRECT, INCIDENTAL, OR CONSEQUENTIAL DAMAGES WHICH INCLUDE, BUT ARE NOT LIMITED TO, ANY DELAY IN RENDERING SERVICE OR LOSS OF USE DURING THE REPAIR PERIOD OF THE COVERED PRODUCT(S) OR WHILE AWAITING PARTS.
   b. LIMITATION OF LIABILITY: To the extent permitted by law, liability of Musco for any defective Covered Product(s) shall be limited to repair or replacement of the Covered Product(s). THIS CONTRACT IS YOUR SOLE EXPRESS WARRANTY. ALL IMPLIED WARRANTIES INCLUDING, BUT NOT LIMITED TO, IMPLIED WARRANTIES OF MERCHANTABILITY AND FITNESS FOR A PARTICULAR PURPOSE, ARE HEREBY EXPRESSLY EXCLUDED.
   c. If applicable, the liability of the issuing surety of the surety bond is limited to the first 12 months of the warranty period.
   d. Musco requires reasonable access for equipment to service the system. We will follow designated access routes but will not be responsible for damage on the property for operating equipment in the prescribed manner.
   e. If we find that any parts of the Covered Products become obsolete, prohibited by law or regulation or are no longer available, Musco may replace them with comparable parts at our discretion. We will notify you of any replacement cost prior to starting the work.
6. **Transfer and Assignment:** Except to facility owners, you cannot assign your rights and obligations under this Contract without prior written consent of Musco. A successor of your entire business shall acquire your interests under this Contract.
7. **Governing Law:** Unless otherwise governed by applicable state law, the Contract shall be interpreted and enforced according to the laws of the State of Iowa.
8. **Subrogation:** In the event Musco repairs or replaces any Covered Product(s), parts or components due to any defect for which our vendors, agents or suppliers may be legally responsible, you agree to assign your rights of recovery to Musco. You will be reimbursed for any reasonable costs you may incur in connection with the assignment of your rights. You will be made whole before Musco retains any amounts it may recover.

Sample

©2020 Musco Sports Lighting, LLC · M-3924-enUS-1

ITEM G

Musco Lighting shall deliver equipment to the job site
10-12 weeks after submittal approval.

City of Newton Council Report

Item:
Resolution approving the submittal of an Iowa DNR Resource and Protection (REAP) grant application for the Cardinal Pond Improvements Project

Summary:
Authorize the Community Development Director to submit a grant application for said project.

Financial Impact:
Up to an estimated $125,000 in grant funds for the Cardinal Pond Improvements Project, if awarded, and no local match is required.

Report Number: 2024-750
Date:
August 5, 2024
Lead Department:
Community Development
Recommendation:
Approve

Background:
Cardinal Pond, constructed in 2020 in conjunction with the development of Arbor Estates, does not have trail or ADA access. This makes it difficult for citizens to utilize the only pond in the city's park system. The City of Newton Capital Improvements Plan includes a project to install improvements such as trails, an ADA-accessible fishing pier, and other enhancements to Cardinal Pond.

In determining which projects to include in a REAP grant application, the above-noted project best met the grant's rules, timeline, and available local funding requirements. Staff is working with Bolton & Menk's grant writing team to finalize said application ahead of the submittal deadline on August 15, 2024.

Recommendation:
City staff recommends approval of this resolution authorizing the Community Development Director to apply for an Iowa DNR Resource and Protection (REAP) grant for the Cardinal Pond Improvements Project.

Matt Muckler, City Administrator

RESOLUTION NO. 2024 – _____

RESOLUTION APPROVING THE SUBMITTAL OF AN IOWA DNR RESOURCE AND PROTECTION (REAP) GRANT APPLICATION FOR THE CARDINAL POND IMPROVEMENTS PROJECT

WHEREAS, Cardinal Pond, constructed in 2020 in conjunction with the development of Arbor Estates, does not have trail or ADA access. This makes it difficult for citizens to utilize the only pond in the city's park system; and

WHEREAS the City of Newton Capital Improvements Plan includes a project to install improvements such as trails, an ADA-accessible fishing pier, and other enhancements to Cardinal Pond; and

WHEREAS, in determining which projects to include in a REAP grant application, the above-noted project best met the grant's rules, timeline, and available local funding requirements; and

WHEREAS, staff is working with Bolton & Menk's grant writing team to finalize said application ahead of the submittal deadline on August 15, 2024; and

WHEREAS, City staff recommends approval of this resolution authorizing the Community Development Director to submit an application for an Iowa DNR Resource and Protection (REAP) grant for the Cardinal Pond Improvements Project.

NOW, THEREFORE, BE IT RESOLVED by the City Council of the City of Newton, Iowa, that the Community Development Director is authorized to submit an application for an Iowa DNR Resource and Protection (REAP) grant for the Cardinal Pond Improvements Project.

PASSED this _____ day of August, 2024.

APPROVED this ____ day of August, 2024.

_____
Evelyn George, Mayor

ATTEST:

_____
Katrina Davis, City Clerk

City of Newton Council Report

Item:
Resolution accepting completion of the Fairmeadows North Plat 7 Storm Sewer Improvement Project

Summary:
Accept completion of the contract for Improved Stormwater discharge Infrastructure in Fairmeadows North Plat 7.

Financial Impact:
Council previously approved a contract for $13,022.24 on May 20, 2024, and this action would accept the project and authorize payment of the retainage amount of $651.11.

Report Number: 2024-687
Date:
August 5, 2024
Lead Department:
Public Works
Recommendation:
Approve

Background:
In late 2017, construction was completed on the Fairmeadows North Plat 8 subdivision in northeast Newton. As part of that plat, an overland stormwater easement was included that allowed stormwater to cross the backyards of the platted lots. This stormwater included not only the runoff from the new lots in Plat 8 but also public stormwater discharge from the neighboring Plat 7 created in the early 2000s.

Following the review of numerous issues raised by the residents in Plat 8, staff prepared plans to reroute the stormwater discharge from Plat 7 into Agnes Patterson Park in 2022. After construction, citizens expressed safety concerns about the open trench drain design, functionality, and appearance. An additional project was designed and placed out to bid to address these concerns.

City Council passed a resolution on May 20, 2024, awarding a contract to Lanphier Excavating for $13,022.24. The Public Works Director has signed the Statement of Completion Form stating that the project has been substantially completed in general compliance with the contract's terms, conditions, and stipulations. The final contract amount, based on actual measured quantities of work completed, is $13,022.15.

Recommendation:
City staff recommends accepting the completion of the Fairmeadows North Plat 7 Storm Sewer Improvement Project and authorizing the retainage amount of $651.11 to be paid to the contractor no sooner than 30 days after approval of this resolution should no claims be on file.

Matt Muckler, City Administrator

RESOLUTION 2024- _____

RESOLUTION ACCEPTING COMPLETION OF THE FAIRMEADOWS NORTH PLAT 7 STORM SEWER IMPROVEMENT PROJECT

WHEREAS, on May 20, 2024, City council approved a resolution awarding a contract to Lanphier Excavating of Reasnor, IA, in the amount of $13,022.24; and

WHEREAS, Lanphier Excavating has completed the work, and the Public Works Director has signed the Statement of Completion Form stating that the project has been substantially completed in general compliance with the terms, conditions, and stipulations of said contract; and

WHEREAS, the final contract amount, based on actual measured quantities of work completed, is $13,022.15.

NOW, THEREFORE, BE IT RESOLVED, by the City Council of the City of Newton, Iowa, that the City of Newton hereby accepts the completion of the project and authorizes the Public Works Director to execute payment of the retainer in the amount of $651.11 no sooner than 30 days after approval of this resolution should no claims be on file, with said payment to be made using Stormwater Utility Funds.

PASSED this _____ day of August, 2024.

APPROVED this _____ day of August, 2024.

_____
Evelyn George, Mayor

ATTEST:

_____
Katrina Davis, City Clerk

City of Newton Council Report

Item:
Resolution approving a non-standard improvement in the City Right-of-Way with the property owner of 308 1st Ave E

Summary:
Approval of an agreement for the non-standard use of the city alley right-of-way.

Financial Impact:
None

Report Number: 2024-688

Date:
August 5, 2024

Lead Department:
Public Works

Recommendation:
Approve

Background:
The owners of 308 1st Ave E have requested that a portion of the adjacent public alley be used to install bollards to protect hood vents and electrical panels on the north wall of the property.

The current City of Newton specifications or regulations do not specifically allow public right of way for this type of use. The property owners have agreed to the City's non-standard improvement in the City Right of Way agreement, which includes conditions such as removing snow in the alley during winter months. Use of the alley by others will not be affected by these improvements.

If the City accepts the agreement, the owners will be committed to its terms and standards.

Recommendation:
City staff recommends approval of the agreement with the property owners for the non-standard improvements in the City right-of-way.

Matt Muckler, City Administrator

RESOLUTION 2024- _____

RESOLUTION APPROVING A NON-STANDARD IMPROVEMENT IN THE CITY RIGHT-OF-WAY AGREEMENT WITH THE PROPERTY OWNER OF 308 1ST AVE E

WHEREAS, the property owners of 308 1ST Ave E have requested that a portion of the adjacent public alley be used to install bollards to protect hood vents and electrical panels on the north wall of the property; and

WHEREAS, current City of Newton specifications or regulations do not specifically allow this type of improvement in a public right of way; and

WHEREAS, if the City accepts the agreement, the owner will be committed to its terms and the standards contained within.

NOW, THEREFORE, BE IT RESOLVED, that the non-standard improvement in the City Right of Way agreement between the City of Newton and Family Video Movie Club is hereby accepted; and

BE IT FURTHER RESOLVED, by the City Council of the City of Newton, Iowa, that the non-standard improvement in the City right of way between the City of Newton and said owners is to be signed by the Mayor and City Clerk on behalf of the City and the same is hereby approved; and

BE IT FURTHER RESOLVED, that the Mayor and City Clerk are hereby directed to execute the said non-standard use agreement with the owner.

.

PASSED this _____ day of August, 2024.

APPROVED this _____ day of August, 2024.

_____
Evelyn George, Mayor

ATTEST:

_____
Katrina Davis, City Clerk

Prepared By: Brandon Schakel – City of Newton Public Works Department
Taxpayer: Family Video Movie Club Inc
Legal Description: Lots 5 & 6 Plus the west sixty-five (65) feet of lot seven (7) and the vacated alley between lots 6 & 7 in block thirteen (13), In the original town, now the City of Newton, Jasper County, Iowa
Parcel No: 0834140018

AGREEMENT BETWEEN CITY OF NEWTON AND PROPERTY OWNERS DESIRING NON-STANDARD IMPROVEMENTS IN CITY RIGHT-OF-WAY

The City of Newton, Iowa, a municipal corporation under the laws of the State of Iowa, hereinafter called "City," and the following named property owner(s): **Family Video Movie Club**

hereinafter called "Owner(s)," hereby agree as follows:

1. Owner(s) own the following described property, hereinafter called "property":

Address: **308 1st Ave E**

Legal Description: Lots 5 & 6 Plus the west sixty-five (65) feet of lot seven (7) and the vacated alley between lots 6 & 7 in block thirteen (13), In the original town, now the City of Newton, Jasper County, Iowa.

2. Owners desire to install, construct, repair or replace non-standard improvements in City right-of-way adjacent to said property. "Non-standard improvement" is defined as:

> "An improvement which shall include but not be limited to a Alley in the Public Right-of-Way; Concrete bollards, wall mounted hood vents, and electrical meters and other similar materials installed within City right-of-way for business purposes, including painted or plastic sleeved concrete bollards."

The non-standard improvements owners and/or tenant(s) wish to make in the City right-of-way are described as follows:

Concrete Bollards, Wall mounted Hood Vents & Electrical Meters

3. For and in consideration of City's permission to complete said non-standard improvements, Owner(s) agree to the conditions specified hereinafter and agree to undertake all of the responsibilities specified hereinafter.

4. City reserves and maintains all right to use and occupy the right-of-way area proposed to be the site of said non-standard improvements, including but not limited to the right to install streets, sidewalks, street signage and utilities. In the event that said non-standard improvements are subsequently damaged, displaced or destroyed by City's or City's franchised utilities use and occupancy of City's right-of-way, Owner(s) shall not be entitled to make any claim for damages whatsoever as a consequence of such action by City or by any utility franchised by City.

5. Owner(s) shall be responsible for normal periodic maintenance of said non-standard improvements, at Owner(s) cost. In the event any non-standard improvements become a nuisance, becomes damaged by accident or act of God, interferes or impedes the installation or maintenance of street, sidewalk, street signage, utilities or any other public works, or in any other way violates the Newton City Code or Code of Iowa, City shall give written notice to Owner(s) of the corrective or removal action required, and if Owner(s) fail or refuse to take such corrective action within ten (10) days, City reserves and maintains the right to remove said non-standard improvements. Under emergency circumstances or when public safety is endangered, City or any utility franchised by City may take immediate corrective or removal action without notice to Owner(s). In either event, Owner(s) shall not be entitled to make any claim for damages whatsoever as a consequence of such action by City or by any utility franchised by City, and City shall maintain right to recover costs of corrective or removal action by billing Owner or, if costs remain unpaid, by certifying the costs of such corrective or removal action to the County Assessor and County Treasurer for collection against Owner(s) property in the same manner as property taxes.

6. Owner(s) further agree to indemnify, defend and hold City harmless from any and all claims by third parties, City's employees, agents and subcontractors, and all employees, agents, assignees, subcontractors or licensees of Owner(s), arising directly or indirectly out of placement, maintenance, or use of non-standard improvements

7. Owner(s) agree to construct, maintain, and remove non-standard improvement in accordance with the terms of this agreement and in conformance with the following:

8. This agreement shall be a covenant running with Owner(s) land, and shall expire **99 years** from the date of approval by the City of Newton.

9. Owner agrees to arrange and pay for snow removal in the alley around the bollards if so desired .Owner acknowledges and accepts that clearing of snow and ice in City alleys is a low priority for City crews and done with large vehicles not allowing the removal of snow from bollards. The entity performing the snow removal on the Owner behalf shall meet City insurance requirements.

KA Hoogland

Owner Date Owner Date

STATE ~~OF IOWA~~ : Tennessee
:ss
~~JASPER COUNTY~~: Davidson

On this 20 day of June, 2024, before me, the undersigned, a Notary Public in and for the State of Iowa, personally appeared Keith A. Hoogland and _____, to me known to be the identical persons named in and who executed the foregoing instrument, and acknowledged that they executed the same as their voluntary act and deed.

Casandra Tipton
Notary Public in and for the State of ~~Iowa~~ TN
(Typed Name) Casandra Tipton
My Commission Expires: 11-8-2027

CASANDRA TIPTON
STATE OF TENNESSEE NOTARY PUBLIC
COUNTY OF DAVIDSON

RECOMMENDED FOR APPROVAL:

_____ _____
Public Works Director Date

ACCEPTANCE, APPROVAL AND EXECUTION BY CITY

CITY OF NEWTON

Dated:_____ By:_____
Evelyn George, Mayor

ATTEST:

_____
Katrina Davis, City Clerk

STATE OF IOWA :
:ss
JASPER COUNTY:

On this _____ day of _____, 20____, before me, the undersigned, a Notary Public in and for the State of Iowa, personally appeared _____ to me personally known, who being by me duly sworn, did say that he is the Mayor of said corporation; that the seal affixed thereto is the seal of said corporation; that said instrument was signed and sealed on behalf of said corporation by authority of the City Council; and that the said _____ as such officer, acknowledged the execution of said instrument to be the voluntary act and deed of said corporation, by it and by him voluntarily executed.

_____
(Printed Name)_____
Notary Public in and for the State of Iowa
My Commission Expires:_____

City of Newton Council Report

Item:
Resolution approving a contracted payment to Axon, LLC for an in-car and body camera system

Summary:
Approve contracted payment to Axon, LCC for Police video system

Financial Impact:
$26,540.05

Report Number: 2024-690

Date:
August 5, 2024

Lead Department:
Police

Recommendation:
Approve

Background:
The City Council approved a 5-year purchase agreement in 2023 for a new video system for the Police Department that includes body cameras, cloud storage and upgraded software. The next contracted payment is due in August 2024 in the amount of $26,540.05

Recommendation:
Staff recommends approval

Matt Muckler, City Administrator

RESOLUTION NO. 2024 – _____

RESOLUTION APPROVING A PAYMENT TO AXON ENTERPRISES, LLC FOR POLICE VIDEO EQUIPMENT AND SERVICE

WHEREAS, the City Council approved a 5-year purchase agreement in 2023 for a new video system for the Police Department that includes body cameras, cloud storage and upgraded software;

WHEREAS, the next payment of the agreement is due in August 2024 in the amount of $26,540.05

NOW, THEREFORE, BE IT RESOLVED by the City Council of the City of Newton, Iowa agrees to approve the $26,540.05 payment to Axon Enterprises, LLC utilizing 2023A bond funds.

PASSED this _____ day of _____, 2024.

APPROVED this _____ day of _____, 2024.

_____
Evelyn George, Mayor

ATTEST:

_____
Katrina Davis, City Clerk

City of Newton Council Report

Item:
Resolution accepting an electric line easement on 1219 S 4th Ave E Newton, Iowa

Report Number: 2024-707

Date:
August 5, 2024

Lead Department:
Public Works

Recommendation:
Approve

Summary:
Acceptance of an easement for installing electrical facilities in the Northwest corner of 1219 S 4th Ave E.

Financial Impact:
None

Background:
Interstate Power and Light Company, dba Alliant Energy, has requested a five-foot by five-foot easement in the northwest corner of the city-owned lot at 1219 S 4th Ave E. The easement is needed for the installation of an electrical transformer. Community Development and Public Works Staff have reviewed the proposed Easement, which is in the northwest corner of the lot and will not affect its future redevelopment.

The easement is for and in consideration of the sum of one dollar. Maps of easement locations are attached to the easement documents.

Recommendation:
City staff recommends that the City Council accept and approve the easement as requested by Interstate Power and Light Company, dba Alliant Energy.

Matt Muckler, City Administrator

RESOLUTION 2024- _____

RESOLUTION ACCEPTING ELECTRICAL LINE EASEMENTS AT 1219 S 4th Ave E NEWTON, IOWA

WHEREAS, Interstate Power and Light Company, dba Alliant Energy, has requested a five-foot by five-foot easement in the northwest corner of the city-owned lot at 1219 S 4th Ave E; and

WHEREAS, the easement is needed for the installation of an electrical transformer; and

WHEREAS, Community Development and Public Works Staff have reviewed the proposed Easement, which is in the northwest corner of the lot and will not affect its future redevelopment; and

WHEREAS, the easement is for and in consideration of the sum of One Dollar.

NOW, THEREFORE, BE IT RESOLVED, by the City Council of Newton, Iowa, that the easement executed by the utility owner subject to City Council approval and now on file with the City Clerk are hereby approved; and

BE IT FURTHER RESOVLED, that the Mayor and City Clerk are authorized to execute the easement documents for the affected property.

PASSED this _____ day of August, 2024.

APPROVED this _____ day of August, 2024.

_____
Evelyn George, Mayor

ATTEST:

_____
Katrina Davis, City Clerk

Prepared by: Heather Dee - Interstate Power and Light Company – PO Box 351, Cedar Rapids, IA 52406 (319) 786-4514
Return To: Courtland Smith, Mi-Tech Services, Inc. 2815 100th St, #310, Urbandale, IA 50322 515-210-7619

SPACE ABOVE THIS LINE FOR RECORDER

ELECTRIC LINE EASEMENT

For and in consideration of the sum of One Dollar ($1.00) and other valuable consideration, the receipt of which is hereby acknowledged, **City of Newton** ("Grantor(s)"), ADDRESS: **1219 S 4th Ave E., Newton, Iowa** do(es) hereby warrant and convey unto **Interstate Power and Light Company, an Iowa Corporation**, its successor and assigns, ("Grantee") a perpetual easement with the right, privilege and authority to construct, reconstruct, maintain, expand, operate, repair, patrol and remove an underground electric and telecommunications line or lines, consisting of wires, transformers, switches and other necessary fixtures, appurtenances and equipment, (including associated surface mounted equipment) and construction (collectively, the "*Line*" or "*Lines*") for transmitting electricity, communications and all corporate purposes of Grantee together with the power to extend to any other party the right to use, jointly with the Grantee, pursuant to the provisions hereof, upon, under, and across the following described lands located in the County of **Jasper** and the State of Iowa:

See Attached Exhibit A, page 3

together with all the rights and privileges for the full enjoyment or use thereof for the aforesaid purpose.

Grantor(s) agrees that it will not construct or place any buildings, structures, plants, or other obstructions on the property described above.

Grantor(s) also conveys the right and privilege to trim, cut down or control the growth of any trees or other vegetation on said described land and such other trees and vegetation adjacent thereto as in the judgment of the Grantee may interfere with construction, reconstruction, maintenance, expansion, operation, repair, use of the Line or Lines.

Grantee, its contractor, or agent may enter said premises for the purpose of making surveys and preliminary estimates immediately upon the execution of this easement.

The Grantor(s) also grants to the Grantee the right of ingress and egress to the Line or Lines now owned by the Grantor(s), for the purpose of constructing, reconstructing, maintaining, expanding, operating, patrolling, repairing and removing the Line or Lines, and the Grantee agrees to pay to the Grantor(s) or its tenants all damages done to the lands (except the cutting and trimming of trees or other vegetation), fences, livestock or crops of the Grantor(s) or its tenants, by the Grantee or its employees while constructing, reconstructing, maintaining, expanding, operating, patrolling, repairing or removing the Line or Lines.

Signed this _____ day of _____, 20__.

GRANTOR(S):
City of Newton

By:_____

By:_____

ALL PURPOSE ACKNOWLEDGMENT

STATE OF_____)

COUNTY OF_____) ss:

On this _____ day of _____, AD. 20_____, before me, the undersigned, a Notary Public in and for said State, personally appeared

_____

_____

_____

_____to me personally known

or _____provided to me on the basis of satisfactory evidence

to be the persons(s) whose name(s) is/are subscribed to the within instrument and acknowledged to me that he/she/they executed the same in his/her/their authorized capacity(ies), and that by his/her/their signature(s) on the instrument the person(s), or the entity upon behalf of which the person(s) acted, executed the instrument.

NOTARY SEAL_____
(Sign in Ink)

_____
(Print/type name)

Notary Public in and for the State of _____

My Commission Expires:_____

CAPACITY CLAIMED BY SIGNER

_____ INDIVIDUAL
_____ CORPORATE
Title(s) of Corporate Officers(s):

_____

_____

_____ N/A
_____ Corporate Seal is affixed
_____ No Corporate Seal procured

_____ PARTNER(s)
_____ Limited Partnership
_____ General Partnership

_____ ATTORNEY-IN-FACT
_____ EXECUTOR(s),
_____ ADMINISTRATOR(s),
_____ or TRUSTEE(s):
_____ GUARDIAN(s)
_____ or CONSERVATOR(s)
_____ OTHER

_____

_____

SIGNER IS REPRESENTING:
List name(s) of persons(s) or entity(ies):

_____

_____

EXHIBIT 'A'

Easement area 5 feet by 5 feet, for placement of facilities in the Northwest corner of Grantor's property described below and more particularly described by placement of the facilities at the time of construction on or adjacent to the following described property.

Grantor's Parcel:

Lot 8 in Scharf's Subdivision in the City of Newton, Jasper County, Iowa.

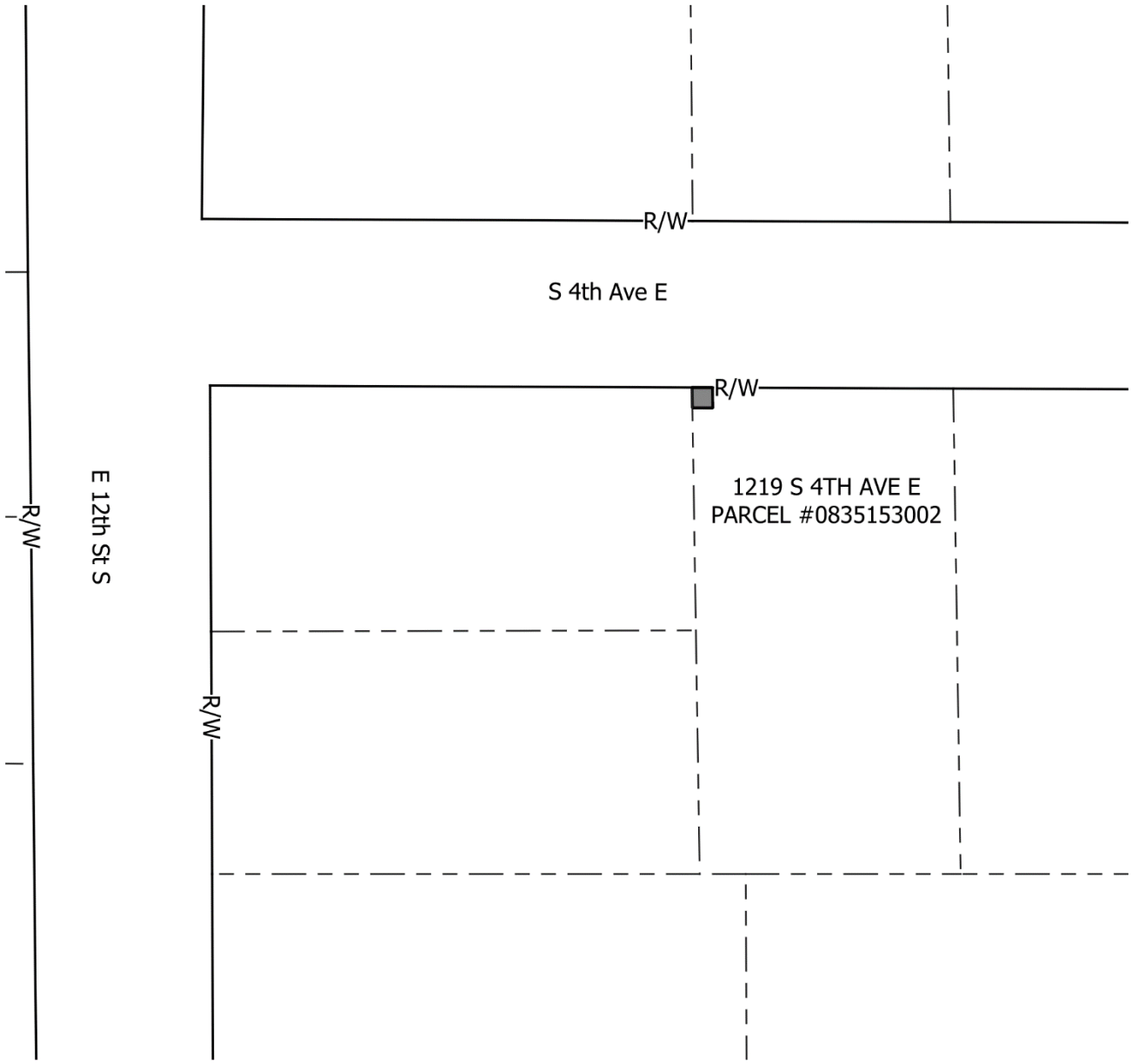

DRAFTED BY: MI-TECH SERVICES, INC
JCC

City of Newton Council Report

Item:
Resolution Approving the Annual Support Fees for the Fire Department Record Management Software

Report Number: 2024-734

Date:
August 5, 2024

Lead Department:
Fire

Recommendation:
Approve

Summary:
This is approval of annual product support for the Fire Department RMS. This amount is over the City Administrator authority to approve. The amount is budgeted.

Financial Impact:
$ 14,573.42 to be paid from the Fire Department Budget.

Background:

The Fire Department utilizes Record Management Software (RMS) from ImageTrend, Incorporated in Lakeville, Minnesota. RMS maintains all of the records generated by the Fire Department. We use it to create fire and EMS run reports, maintain inventory including maintenance and repairs, manage all location and occupant reports along with all inspections, and run all required reports. This invoice also covers all product support. This is the backbone of records management for the Fire Department. We have utilized this software since 2011.

Recommendation:
City Staff recommends Council approve the payment of this invoice to ImageTrend, Inc. of Lakeville, Minnesota in the amount of $14,573.42.

Matt Muckler, City Administrator

RESOLUTION NO. 2024-____

RESOLUTION APPROVING THE ANNUAL SUPPORT FEES FOR THE FIRE DEPARTMENT RECORD MANAGEMENT SOFTWARE

WHEREAS, the Fire Department requires software to maintain, report, and archive data, called a Records Management System; and

WHEREAS, the Fire Department has utilized ImageTrend, Inc. of Lakeville, Minnesota to provide that software and the necessary technical support as required to keep it operational, and

WHEREAS, the amount of the invoice is budgeted and is in excess of the City Administrator authority and requires City Council approval.

NOW, THEREFORE, BE IT RESOLVED, by the City Council of Newton, Iowa, that the invoice from ImageTrend, Inc. of Lakeville, Minnesota in the amount of $14,573.42 is approved.

PASSED this 5th day of August 2024.

APPROVED this _____ day of August 2024.

_____

Evelyn George, Mayor

ATTEST:

_____

Katrina Davis, City Clerk

City of Newton Council Report

Item:
Resolution setting a public hearing for the sale of City-owned property at 1008 and 1010 East 8th Street North in Newton, Jasper county, Iowa

Summary:
Setting public hearing for the sale of City D&D property at 1008-1010 East 8th Street North

Financial Impact:
None. Setting a public hearing.

Report Number: 2024-681
Date:
August 5, 2024
Lead Department:
Community Development
Recommendation:
Approve

Background:
The City has acquired 1008 and 1010 East 8th Street North through the D&D program. In order to entertain offers on the property, the City must first set a public hearing.

The resolution sets the date of the public hearing for the next regular City Council meeting on August 19, 2024.

Recommendation:
Staff recommends approval.

Matt Muckler, City Administrator

RESOLUTION NO. 2024 – _____

RESOLUTION SETTING A PUBLIC HEARING FOR THE SALE OF CITY-OWNED PROPERTY AT 1008 AND 1010 EAST 8TH STREET NORTH IN NEWTON, JASPER COUNTY, IOWA

WHEREAS, the City of Newton owns a property located at **1008 and 1010 East 8th Street North**, legally described as:

EDMUNDSON'S ADDITION SOUTH 44 FEET LOT 8 BLOCK FOUR IN THE CITY OF NEWTON, JASPER COUNTY, IOWA;

AND

THE WEST ½ OF THE NORTH-SOUTH ALLEY ABUTTING THE EAST LINE OF THE SOUTH 44 FEET OF LOT 8, BLOCK FOUR, EDMUNDSON'S ADDITION TO THE CITY OF NEWTON, JASPER COUNTY, IOWA;

AND

THE NORTH 22 FEET OF LOT 8 AND THE SOUTH 22 FEET OF LOT 9, ALL IN BLOCK FOUR, EDMUNDSON'S ADDITION TO THE CITY OF NEWTON, JASPER COUNTY, IOWA;

AND

THE WEST ½ OF THE NORTH-SOUTH ALLEY ABUTTING THE EAST LINE OF THE NORTH 22 FEET OF LOT 8 AND THE SOUTH 22 FEET OF LOT NINE, BLOCK FOUR, EDMUNDSON'S ADDITION TO THE CITY OF NEWTON, JASPER COUNTY IOWA.

WHEREAS, it is necessary to hold a public hearing prior to acting upon a purchase/redevelopment agreement for said property;

NOW, THEREFORE, BE IT RESOLVED by the City Council of Newton, Iowa that a public hearing shall be held on August 19, 2024 at 6:00 p.m., at Newton City Hall, 101 West 4th Street South, to receive and accept purchase proposals and Public Notice in substantially the following form shall be given:

PUBLIC NOTICE

The City Council of Newton, Iowa will hold a Public Hearing at 6:00 p.m. August 19, 2024, at Newton City Hall, 101 West 4th Street South, regarding the sale of the following property 1008-1010 East 8th Street North in Newton, legally described as: EDMUNDSON'S ADDITION SOUTH 44 FEET LOT 8 BLOCK FOUR IN THE CITY OF NEWTON, JASPER COUNTY, IOWA; AND THE WEST ½ OF THE NORTH-SOUTH ALLEY ABUTTING THE EAST LINE OF THE SOUTH 44 FEET OF LOT 8, BLOCK FOUR, EDMUNDSON'S ADDITION TO THE CITY OF NEWTON, JASPER COUNTY, IOWA; AND THE NORTH 22 FEET OF LOT 8 AND THE SOUTH 22 FEET OF LOT 9, ALL IN BLOCK FOUR, EDMUNDSON'S ADDITION TO THE CITY OF NEWTON, JASPER COUNTY, IOWA; AND THE WEST ½ OF THE NORTH-SOUTH ALLEY ABUTTING THE EAST LINE OF THE NORTH 22 FEET OF LOT 8 AND THE SOUTH 22 FEET OF LOT NINE, BLOCK FOUR, EDMUNDSON'S ADDITION TO THE CITY OF NEWTON, JASPER COUNTY IOWA. Offers shall be submitted by 10:00 a.m. on August 13, 2024, to the Newton Community Development Department; 303 West 4th Street North, Suite 501, Newton, Iowa 50208. Additional information about the property is available at the Community Development Department, (641)-792-6622.

PASSED this _____ day of August, 2024.

APPROVED this _____ day of August, 2024

_____
Evelyn George, Mayor

ATTEST:

_____
Katrina Davis, City Clerk

City of Newton Disbursements 8-06-24

Vendor	Department	Description	Amount
Acco Unlimited Corp	Maytag Pool	Supplies	$ 5,454.20
Accujet LLC	I&I Program RESO 2024-128	Service	$ 145,663.74
Acushnet Company	Golf	Merchandise	$ 2,099.17
AESSEAL Midwest Inc	Water Pollution Control	Supplies	$ 3,514.41
Air Products and Chemicals Inc	Water Treatment Plant	Supplies	$ 4,256.28
Airgas USA LLC	Fire	Supplies	$ 289.82
Alliant Energy/IPL	All	Utilities	$ 5,592.15
Allmax Software LLC	Water Pollution Control	Services	$ 3,549.00
Amazon Capital Services	All	Supplies	$ 5,305.44
American Legal Publishing Corporation	Administration	Service	$ 612.00
American Test Center	Fire	Service	$ 1,200.00
Axon Enterprise Inc	Police RESO 8/5/24	Service	$ 26,540.05
Baker & Taylor	Library	Supplies	$ 2,356.90
Baker & Taylor Entertainment	Library	Supplies	$ 105.63
Barney's Services Inc	Water Distribution	Supplies	$ 10.00
Basepoint Building Automations	Parks	Service	$ 525.00
Blackstone Publishing	Library	Supplies	$ 7.95
BMI	Parks	Service	$ 435.00
Boland Recreation	Parks	Supplies	$ 7,800.00
Bolton & Menk Inc	All	Service	$ 31,099.88
Bound Tree Medical LLC	Fire	Supplies	$ 888.67
Breman & Sons Tree Service	Community Beautification	Service	$ 1,200.00
Brick Gentry P.C.	Legal Services	Service	$ 8,725.00
Brisel, Dustin	Police	Reimbursement	$ 20.00
Brothers Concrete	N Central TIF RESO 2023-392	Service	$ 298,819.65
Brownells Inc	Police	Supplies	$ 85.66
Burbach Aquatics Inc	Maytag Pool	Service	$ 47,725.42
Calibre Press	Police	Service	$ 597.00
Capital One	All	Supplies	$ 689.96
Car Care Distributing	Fire	Supplies	$ 294.00
Center Point Large Print	Library	Supplies	$ 113.98
Central Iowa Distributing Inc	Water Pollution Control	Supplies	$ 1,422.00
Central Iowa Regional Transportation	Engineering	Service	$ 2,679.00
ChampVA	Fire	Reimbursement	$ 101.87
Cintas	All	Service	$ 1,891.91
Civic Systems LLC	Water Pollution Control	Services	$ 1,500.00
Con-Struct Inc	Airport RESO 2021-134	Services	$ 11,159.65
Continental Research	Water Distribution	Supplies	$ 493.16
Core & Main	Water Pollution Control	Supplies	$ 93.90
Costa Oil Newton	Fire	Service	$ 84.64
Cummins Central Power	Library	Service	$ 430.93
D & K Products	Parks	Supplies	$ 1,653.22
Danko Emergency Equipment	Fire	Supplies	$ 4,525.84
Dannen, Ryan	D&D/Parks	Services	$ 2,535.00
Des Moines Diesel Inc	Cemetery	Supplies	$ 272.00
Diamond Vogel Inc	All	Supplies	$ 581.39
Dickerson, Lisa	Police	Refund	$ 373.40
Digium Cloud Services LLC	Fire	Service	$ 453.66
Dinges Fire Company	Fire	Supplies	$ 19,944.05
DJ Gongol & Associates Inc	Water Pollution Control	Supplies	$ 1,853.20
DMACC - Ankeny Campus	All	Utilities	$ 1,895.75
Dodd Trash Hauling & Recycling	Solid Waste	Service	$ 72,214.42

EMS MC Inc	Fire	Service	$ 4,576.05
Fareway	Utilities Billing	Supplies	$ 19.90
Fastenal	Parks	Supplies	$ 133.64
FBG Service Corporation	Library	Supplies	$ 1,732.25
Fire Dept Training Net	Fire	Service	$ 60.00
Fire Service Training Bureau	Fire	Service	$ 100.00
Fisher, Mike	Police	Reimbursement	$ 60.00
Forbes Office Solutions	All	Supplies	$ 824.25
Four Points Golf Cars	Golf	Supplies	$ 419.03
FOX Strand	Water Treatment Plant	Services	$ 2,689.40
Front Line Therapy LLC	Fire	Service	$ 4,320.00
Frontier Technology LLC	Police	Service	$ 888.00
Galls LLC	Fire/Police	Supplies	$ 575.46
Garcia, Jose	Police	Reimbursement	$ 127.85
Global Industrial	I&I Program	Supplies	$ 669.54
Grainger Inc	All	Supplies	$ 525.94
Gralnek-Dunitz	Water Pollution Control	Supplies	$ 37.00
Gregg Young Auto Center	Police	Service	$ 496.72
Hach Co	Water Treatment Plant	Supplies	$ 412.78
Harden, Jacob	Police	Reimbursement	$ 79.33
Hartz, David	Landfill	Reimbursement	$ 45.00
Hawkins Water Treatment	Water Treatment Plant	Supplies	$ 8,804.57
HD Supply	Landfill	Supplies	$ 460.14
Heisdorffer, Rex	Fire	Reimbursement	$ 1,013.33
Hewitt Service Center	Street	Supplies	$ 678.00
Hornung's	Golf	Merchandise	$ 31.95
Hydro Klean	Water Pollution Control	Services	$ 3,600.00
Hy-Vee Inc	Water Treatment/Police	Supplies	$ 108.85
Image Trend Inc	Fire	Service	$ 600.00
IMWCA	All	Service	$ 2,734.33
InfoSense Inc	Water Pollution Control	Supplies	$ 1,170.00
Iowa Finance Authority	Executive	Service	$ 375.00
Iowa League of Cities	Finance	Service	$ 100.00
Iowa Library Association	Library	Service	$ 79.80
Iowa One Call	Engineering/WPC	Service	$ 761.50
Iowa Prison Industries	Police	Supplies	$ 424.36
Isolved Benefit Services	Finance	Service	$ 99.65
Jack, Kenleigh	Maytag Pool	Reimbursement	$ 50.00
Jasper County General Relief	Utilities Billing	Refund	$ 162.52
JETCO Inc	Water Pollution Control	Services	$ 647.25
Johnson Aviation	Airport	Service	$ 3,634.62
Kellogg Lawn & Snow	Water Treatment Plant	Supplies	$ 92.40
Keltek Incorporated	Fire	Service	$ 475.54
Kimpston-Burkgren, Joel	Police	Service	$ 1,400.00
Kinetic Edge Physical Therapy	Water Pollution Control	Service	$ 157.50
Kirkham Michael	Airport RESO 2024-052	Services	$ 10,975.38
Kno2 LLC	Fire	Service	$ 960.00
Lanphier Excavating LLC	Storm Water RESO 2024-167	Service	$ 12,371.04
Lazcano, Andrea	Utilities Billing	Refund	$ 88.21
Legacy Emergency Vehicles	Fire	Service	$ 1,234.70
Liberty Process Equipment Inc	Water Pollution Control	Supplies	$ 14,554.36
Liberty Tire Services LLC	Landfill	Supplies	$ 160.00
Linahon, Brooke	Maytag Pool	Reimbursement	$ 45.00
Lindow, Logan	Police	Reimbursement	$ 40.00
Lovan, Kyle	Police	Reimbursement	$ 40.00
Lyman, Rick	D&D/Police	Services	$ 5,623.96
Lynnville Repair Inc	Fire	Service	$ 1,436.14

Magnum Automotive	Fire/Police	Service	$ 992.25
Mahaska Bottling Co	Golf/Maytag Pool	Concessions	$ 2,184.10
Manatts - Brooklyn	Street RESO 2024-071	Service	$ 155,846.27
Manatts - D.M.	All	Supplies	$ 3,453.95
Maxim Advertising	Executive	Supplies	$ 1,883.20
MercyOne DSM Medical Ctr-Financial Ops	Fire	Supplies	$ 567.33
Meyer, Harold	Police	Refund	$ 25.00
Microbac Laboratories Inc	Maytag Pool	Service	$ 70.00
Mid Country Machinery	Landfill	Supplies	$ 327.25
Midwest Automatic Fire	Street	Supplies	$ 143.55
Midwest Cover Inc	Parks	Supplies	$ 2,420.00
Midwest Turf Support	Golf	Supplies	$ 1,985.00
Mike's Machine Repair	Water Pollution Control	Services	$ 140.00
Minturn Inc	Parks RESO 2023-243	Service	$ 25,370.70
Mississippi Lime Company	Water Treatment Plant	Supplies	$ 60,050.58
MTI Distributing Inc	Cemetery	Supplies	$ 490.03
Municipal Collections of America Inc	Fire	Reimbursement	$ 906.50
Municipal Supply Inc	Water Distribution	Supplies	$ 45,838.94
PowerPlan	Landfill	Supplies	$ 139.99
NAPA Auto Parts	All	Supplies	$ 1,178.63
National Band & Tag	Police	Supplies	$ 349.30
News Printing Company	All	Services	$ 889.34
Newton Apparel	Police	Supplies	$ 231.00
Niemann Ace Hardware 650	All	Supplies	$ 289.95
Nimtz, Cassie	Utilities Billing	Refund	$ 28.79
OCLC Inc	Library	Service	$ 6,315.75
ODP Business Solutions LLC	Parks	Supplies	$ 89.99
Oldfield, Randy	Police	Reimbursement	$ 20.00
O'Reilly Auto Parts	Water Pollution Control	Supplies	$ 80.55
OverDrive Inc	Library	Service	$ 4,082.40
Petroleum Marketers Management Ins Co	Tort Liability	Services	$ 1,538.00
Phelps Uniform Specialists	All	Service	$ 366.25
Pipe Pros Plumbing	Water Pollution Control	Services	$ 135.47
Pitney Bowes	Cemetery	Supplies	$ 198.15
Preferred Pest Control Inc	Library	Service	$ 382.20
Protex Central Incorporated	Airport	Services	$ 372.50
Quick Supply Company	Landfill	Supplies	$ 881.20
Quill Corporation	All	Supplies	$ 163.06
Ray, Randy	D&D/Police	Services	$ 4,667.96
Reeves Heating & Cooling	Airport/Library	Services	$ 465.80
Regal Clean LLC	City Center	Service	$ 3,326.53
Reilly Construction Co	Street RESO 2022-185	Service	$ 144,264.00
Reliant Fire Apparatus Inc	Fire	Service	$ 5,991.46
Reserve Account-Pitney Bowes	Finance	Service	$ 3,000.00
Reynolds, Chandler	Police	Reimbursement	$ 80.00
Riggs Printing Inc	All	Supplies	$ 343.00
Ryan's Tire & Auto	All	Service	$ 2,373.95
Secretary of State	Library	Training	$ 30.00
Security Equipment Inc	Police	Service	$ 850.64
Smith Quality Rental	Fire	Supplies	$ 217.80
Spahn & Rose Lumber Co	All	Supplies	$ 1,099.27
Springer Professional Home Services	City Center	Service	$ 70.40
Sully Construction Inc	Golf Clubhouse RESO 2024-154/235	Service	$ 19,259.04
The Paper Corporation	Library	Supplies	$ 1,336.40
The Police and Sheriffs Press	Police	Supplies	$ 60.20
Theisen's	All	Supplies	$ 3,485.79
TK Elevator	City Center	Service	$ 211.89

Town & Country Sanitary Services	Water Treatment Plant	Services	$ 2,000.00
Town & Country Wholesale Co	Golf/Pool	Concessions	$ 3,346.70
Traf-O-Teria System	Police	Supplies	$ 443.60
True Pitch Inc	Parks	Supplies	$ 115.00
TruGreen Processing Center	Water Treatment Plant	Services	$ 185.87
Two Rivers Cooperative	Golf	Fuel	$ 1,974.28
UBBEN Building Supply	Engineering	Supplies	$ 325.00
Utilities Equipment Co	Water Distribution	Supplies	$ 3,569.27
Van Maanen Electric Inc	Airport/Street Lighting	Supplies	$ 350.00
Van Manen, Austin	Police	Reimbursement	$ 20.00
Van Wall Equipment	All RESO 2024-230	Supplies	$ 28,192.74
Warnick Mechanical	Airport	Service	$ 9,118.00
Waste Solutions of Iowa	Golf/Parks	Service	$ 864.00
Watson, Dave	Police	Reimbursement	$ 60.00
Wells Fargo Financial Leasing Inc	Water Pollution Control	Service	$ 206.38
Wex Bank	Water Distribution	Supplies	$ 2,702.75
Wilfawn, Tricia Bryan & Jerry	Utilities Billing	Refund	$ 65.00
Williams Scotsman Inc	Golf	Service	$ 628.00
Windstream	City Center/Water Treatment	Utilities	$ 190.43
Winters, Nathan	Police	Reimbursement	$ 20.00
Witmer Public Safety Group	Fire	Supplies	$ 198.22
Xerox Corporation	Water Treatment Plant	Services	$ 32.61
Ziegler Inc	Water Treatment Plant	Services	$ 5,488.24
Zoll	Fire	Supplies	$ 1,687.56
Total:			**1,399,062.14**

Pre-Authorized Payments

AT&T Mobility	Landfill	Utilities	$ 137.06
Axon Enterprise Inc	Police	RESO 2024-247	$ 18,652.22
Danny Beeler	Parks	RESO 2023-355	$ 400.00
Beverage Distributors of Iowa	Golf	Concessions	$ 1,168.06
Black Hills Energy	All	Utilities	$ 598.46
Patrick Curtis	Parks	RESO 2023-355	$ 1,100.00
DISH Network	Airport	Utilities	$ 152.10
DMACC	Special Kitchen Grant	RESO 2024-136	$ 14,243.50
Doll Distributing	Golf	Concessions	$ 1,497.10
Emma Ferry	Parks	RESO 2023-355	$ 400.00
Gregg Young	Street	RESO 2023-344	$ 45,650.00
Dave Heck	Parks	RESO 2023-344	$ 800.00
Home Key LLC	D&D	RESO 2024-161	$ 25,000.00
Iowa Beverage System	Golf	Concessions	$ 651.70
Johnson Brothers of Iowa	Golf	Concessions	$ 839.20
Mediacom	Administration	Utilities	$ 336.90
MyGov	Police	RESO 2024-248	$ 10,318.00
Shane Torres	DT Improvement Grant	RESO 2024-234	$ 17,648.04
United States Cellular	All	Utilities	$ 1,708.27
Verizon	Disaster Services	Utilities	$ 35.01
Windstream	Fire	Utilities	$ 69.73
Total:			**$ 141,405.35**

City of Newton Council Report

Item:
Public hearing on a resolution approving the purchase agreement for real property at 315, 319, and 321 East 8th Street South Newton, Jasper County, Iowa

Summary:
Re-holding the public hearing.

Financial Impact:
None.

Report Number: 2024-679

Date:
August 5, 2024

Lead Department:
Community Development

Recommendation:
Approve

Background:
Because the notice for the previous public hearing was not published in the Newton Daily News, it is necessary to hold the public hearing on the sale of this property again.

There are no other received offers and no changes to the purchase agreement with VL Construction are proposed from what the Council reviewed in June 2024.

Recommendation:
Staff recommends approval

Matt Muckler, City Administrator

RESOLUTION NO. 2024 – _____

RESOLUTION APPROVING THE PURCHASE AGREEMENT FOR REAL PROPERTY AT 315, 319, AND 321 EAST 8TH STREET SOUTH NEWTON, JASPER COUNTY, IOWA

WHEREAS, VL Construction, LLC has submitted an offer to purchase real property, certain land owned by the City of Newton, Iowa, located at 315, 319, 321 East 8th Street South, legally described as:

THE SOUTH 38 FEET OF LOT 8 IN BLOCK 1, OF THE SUB-DIVISION OF BLOCK 2, OF SOUTHEAST ADDITION, BEING IN AND FORMING A PART OF THE CITY OF NEWTON, JASPER COUNTY, IOWA, AS THE SAME APPEARS ON PLAT RECORDED IN BOOK 167 AT PAGE 415 IN THE OFFICE OF THE RECORDER OF SAID COUNTY; AND

THE SOUTH 49.61 FEET OF THE NORTH 115.61 FEET OF LOT 8 IN BLOCK 1 OF THE SUB-DIVISION OF BLOCK 2 OF SOUTHEAST ADDITION TO NEWTON, JASPER COUNTY, IOWA; AND

THE NORTH 66 FEET OF LOT 8 AND PART OF LOT 7, DESCRIBED AS COMMENCING AT A POINT LOCATED ON THE SOUTH LINE OF SAID LOT 7, A DISTANCE OF 13.92 FEET WEST OF THE SOUTHEAST CORNER OF SAID LOT 7, THENCE RUN EAST TO THE SAID SOUTHEAST CORNER OF SAID LOT 7, THENCE NORTH TO THE NORTHEAST CORNER OF SAID LOT 7, THENCE WEST ALONG THE NORTH LINE OF SAID LOT 7 A DISTANCE OF 9.92 FEET THENCE IN A SOUTHERLY DIRECTION TO THE POINT OF BEGINNING, SAID LOT 8 AND SAID PART OF LOT 7 HEREINBEFORE DESCRIBED ALL BEING IN BLOCK 1, OF THE SUB-DIVISION OF BLOCK 2, OF SOUTHEAST ADDITION, BEING IN AND FORMING A PART OF THE CITY OF NEWTON, JASPER COUNTY, IOWA, AS THE SAME APPEARS ON PLAT RECORDED IN BOOK 167 AT PAGE 415 IN THE OFFICE OF THE RECORDER OF SAID COUNTY;

WHEREAS, said real estate is not needed for public purposes, and

WHEREAS, Iowa Code Chapter 364.7 requires cities to set a public hearing before selling or disposing of real estate, and,

WHEREAS, the City has set such a hearing, given the required public notice, and held the public hearing; and

NOW, THEREFORE, BE IT RESOLVED by the City Council of Newton, Iowa:

That the attached Purchase Agreement for property at 315, 319, and 321 East 8th Street South be approved and accepted, subject to the restrictions in the agreement and that the signatures of the Mayor and City Clerk are obtained for the agreement.

PASSED this _____ day of August, 2024.

APPROVED this _____ day of August, 2024.

(Seal) _____
Evelyn George, Mayor

ATTEST:

_____
Katrina Davis, City Clerk

PURCHASE AND REDEVELOPMENT AGREEMENT

This Purchase Agreement (hereinafter "Agreement") for sale of property owned by the City of Newton at **315, 319, 321 East 8th Street South**, is made on or as of the 4th day of JULY, 2024, by and between the City of Newton, Iowa (hereinafter "City"), and VL CONSTRUCTION, LLC, 423 110th Ave, Otley IA 50214. (hereinafter "Buyer") and in consideration of the premises and the mutual obligations of the parties hereto, each of them does and hereby covenant and agree with the other as follows:

SECTION 1. PURCHASE PRICE. Subject to all the terms, covenants and conditions of this Agreement, the City will sell the Property to the Purchaser for, and the Purchaser will purchase the Property from the City and pay therefore, the amount of **Five Hundred** Dollars ($500.00) (hereinafter "Purchase Price"). The cash payment representing the full Purchase Price shall be delivered to the City simultaneously with the delivery of the deed conveying the Property to the Purchaser.

SECTION 2. TAXES. The City will prorate to the Buyer the taxes incurred under City ownership until the time of closing. All regular taxes due and payable after closing shall be the responsibility of the Developer.

SECTION 3. SPECIAL ASSESSMENTS. The City shall pay all special assessments which are a lien on the date of acceptance of this offer. None are known at this time.

SECTION 4. DESCRIPTION OF PROPERTY. All that certain parcel of land (hereinafter "Property") described as follows:

THE SOUTH 38 FEET OF LOT 8 IN BLOCK 1, OF THE SUB-DIVISION OF BLOCK 2, OF SOUTHEAST ADDITION, BEING IN AND FORMING A PART OF THE CITY OF NEWTON, JASPER COUNTY, IOWA, AS THE SAME APPEARS ON PLAT RECORDED IN BOOK 167 AT PAGE 415 IN THE OFFICE OF THE RECORDER OF SAID COUNTY; AND

THE SOUTH 49.61 FEET OF THE NORTH 115.61 FEET OF LOT 8 IN BLOCK 1 OF THE SUB-DIVISION OF BLOCK 2 OF SOUTHEAST ADDITION TO NEWTON, JASPER COUNTY, IOWA; AND

THE NORTH 66 FEET OF LOT 8 AND PART OF LOT 7, DESCRIBED AS COMMENCING AT A POINT LOCATED ON THE SOUTH LINE OF SAID LOT 7, A DISTANCE OF 13.92 FEET WEST OF THE SOUTHEAST CORNER OF SAID LOT 7, THENCE RUN EAST TO THE SAID SOUTHEAST CORNER OF SAID LOT 7, THENCE NORTH TO THE NORTHEAST CORNER OF SAID LOT 7, THENCE WEST ALONG THE NORTH LINE OF SAID LOT 7 A DISTANCE OF 9.92 FEET THENCE IN A SOUTHERLY DIRECTION TO THE POINT OF BEGINNING, SAID LOT 8 AND SAID PART OF LOT 7 HEREINBEFORE DESCRIBED ALL BEING IN BLOCK 1, OF THE SUB-DIVISION OF BLOCK 2, OF SOUTHEAST ADDITION, BEING IN AND FORMING A PART OF THE CITY OF NEWTON, JASPER COUNTY, IOWA, AS THE SAME APPEARS ON PLAT RECORDED IN BOOK 167 AT PAGE 415 IN THE OFFICE OF THE RECORDER OF SAID COUNTY;

SECTION 5. CONVEYANCE OF PROPERTY.

a) Form of Deed. The City shall convey title to the Property to the Purchaser by Special Warranty Deed and shall contain a right of reversion, which may be exercised by the City if the Purchaser fails to complete in accordance with the timeframes herein (hereinafter "Deed"). Such conveyance and title shall be subject to all conditions, covenants and restrictions contained in this Agreement.

b) Time and Place for Closing and Delivery of Deed. The City shall deliver the Deed and possession of the Property to the Buyer no later than 60 days from the date of approval by the Newton City Council or on such other date as the parties hereto may mutually agree in writing (hereinafter "Closing Date"). Conveyance shall be made at the office of the City of Newton's legal counsel, Caldwell, Bierly, Chalupa PLLC, 211 1st Avenue West, Newton, Iowa 50208, at which time and place Buyer shall accept such conveyance and pay to the City the Purchase Price.

c.) Abstract of Title. The Seller shall provide an abstract of Title to the Purchaser for property subject to this agreement. It will be the Seller's responsibility to have abstract(s) updated. The abstract(s) shall become the property of the Purchaser at the time of the delivery of the deed.

SECTION 6. IMPROVEMENTS. The Buyer shall be responsible for making improvements to the property as follows:

a) Consolidation of the three properties into one development lot.
b) Construction of at least a 3-bedroom single family home, substantially similar to plans shown in "Attachment A" of this agreement, which meets all adopted applicable codes for the City of Newton and State of Iowa within 2 years of the date of transfer of the property.
c) Removal and clean-up of old, deteriorated, and excess concrete/drive approaches located in the right-of-way abutting this property.

SECTION 7. PROHIBITION AGAINST ASSIGNMENT AND TRANSFER. The Buyer shall not sell or otherwise transfer ownership of the Property without the specific written approval of the City, prior to when the construction of the improvements has been completed and the City has issued a Certificate of Completion.

SECTION 8. CERTIFICATE OF COMPLETION.

a) Promptly after completion of the improvements in accordance with this Agreement, as relating solely to the obligations of the Buyer to timely construct certain improvements, the City will furnish the Buyer with a Certificate of Completion so certifying. Such certificate shall be a conclusive determination of satisfaction and termination of this Agreement.

b) If the City shall refuse or fail to provide certification in accordance with this Section, the City shall, within thirty (30) days after written request by the Developer, provide the Developer with a written statement indicating with detail in what respects the Developer has failed to complete the improvements in accordance with this Agreement, or its otherwise in default, and what measures or acts will be necessary, in the opinion of the City, for the Developer to take or perform in order to obtain such certification.

SECTION 9. REMEDIES. Except as otherwise provided in this Agreement, in the event of any default in or breach of this Agreement or any of its terms or conditions by either party, the party

alleged to be in default or breach shall, upon written notice from the other, proceed immediately to cure or remedy such default or breach within sixty (60) days after receipt of such notice. In such case, if action is not taken or not diligently pursued, or the default or breach shall not be cured or remedied within a reasonable time, the aggrieved party may institute such proceedings as may be necessary or desirable in its opinion to cure and remedy such default or breach.

In the event that the City does not tender conveyance or possession of the Property in the manner and condition, and by the date, provided in this Agreement, and any such failure shall not be cured within thirty (30) days after the date of written demand by the Purchaser, then this Agreement shall, at the option of the Purchaser, be terminated by written notice thereof to the City, and neither the City nor the Purchaser shall have any further rights against or liability to the other under this Agreement. All deposits, if any, shall be returned to the Purchaser.

SECTION 10. NOTICES AND DEMANDS. A notice, demand or other communication under this Agreement by either party to the other shall be sufficiently given or delivered if it is dispatched by registered or certified mail, postage prepaid, return receipt requested, or delivered personally, and:

a) In the case of the Buyer, is addressed or delivered personally to the Buyer at the address stated in preamble to this Agreement; and,

(b) In the case of the City, is addressed or delivered personally to the City Administrator, 101 West 4th Street South, Newton, IA 50208, or at such other address with respect to either party as that party may from time to time designate in writing and forward to the other as provided in this Section.

SECTION 11. LIMITATION ON WARRANTIES. The City makes no warranties with regard to the condition of the Property or the structure located thereon, including, without limitation, (i) environmental matters; (ii) geological conditions; (iii) drainage issues, conditions or problems; (iv) soil conditions; (v) the zoning or other land use restrictions; (vi) the availability of utilities to the property; (vii) usage of adjoining property; (viii) access to the property; (ix) the value of the property; (x) the presence of hazardous materials in or on the property; (xi) the existence or non-existence of underground storage tanks on the property; (xii) the potential for further development of the property; or (xiii) the merchantability of the property of fitness of the property for any particular purpose, unless otherwise provided herein. The Purchaser expressly acknowledges and agrees that the City, and their officials, officers, employees, or agents have not made any representations or warranties concerning the Property or Project of any kind, including but not limited to, the rental or resale value of the Property, the economic or market conditions affecting the Project, or that the Property is suitable for the Project. The Purchaser takes title the Property "AS IS."

SECTION 12. CITY COUNCIL APPROVAL. This Agreement is subject to the approval of the Newton City Council after notice to the public and a hearing on the terms of this Agreement as required by the laws of the State of Iowa.

SECTION 13. ANTI-MERGER PROVISION. The parties specifically agree that all representations, warranties, agreement, responsibilities, obligations and comments specified herein

shall survive the execution, delivery and recording of the deed required by Section 5(a) hereof, shall remain in full force and effective thereafter, and shall not be merged in or extinguished by such execution, delivery and recording of the deed.

IN WITNESS WHEREOF, the City has caused this Agreement to be duly executed in its name and behalf by its Mayor and its seal to be hereunto duly affixed and attested by its City Clerk, and the Purchaser has caused this Agreement to be duly executed in its name, on or as of the day first above written.

(SEAL)

CITY OF NEWTON, IOWA

By: _____
Evelyn George, Mayor

ATTEST:

_____
Katrina Davis, City Clerk

PURCHASER:

By: _____

Tyler Vanderlinden
VL Construction, LLC

ATTACHMENT A. Building Plans

Front Elevation Options

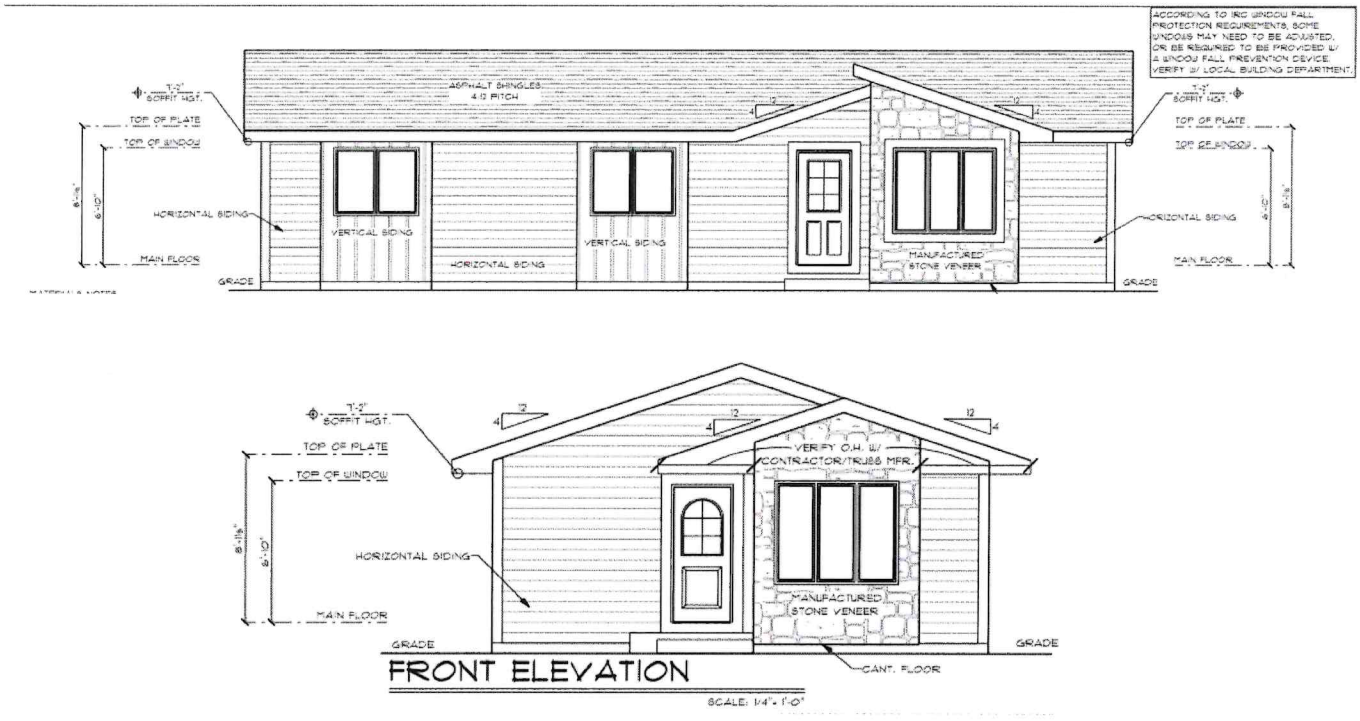

Main Floor Plan Options

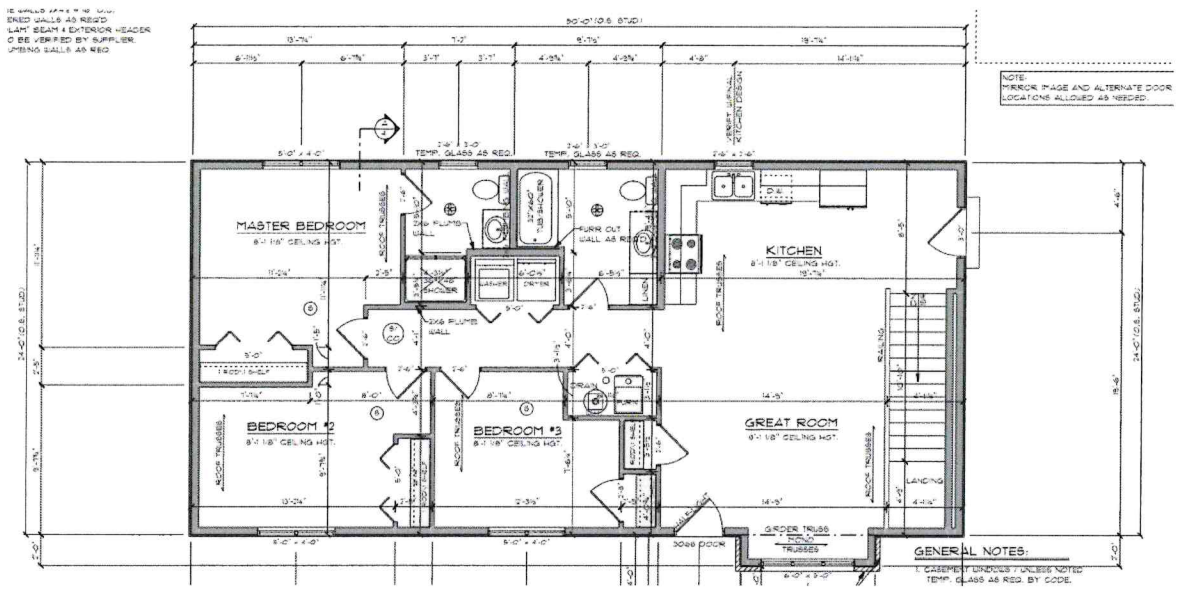

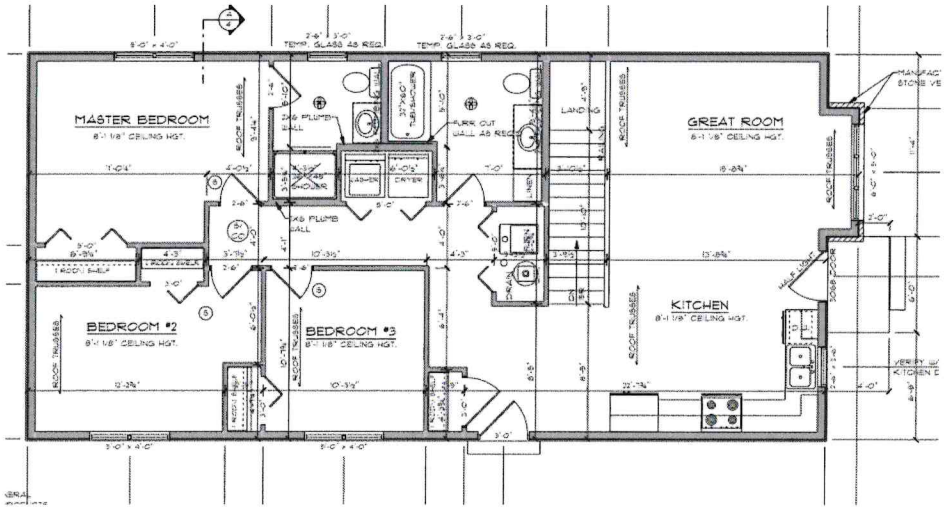

City of Newton Council Report

Item:
First consideration of an Ordinance Amending the Code of Ordinances, City of Newton, Iowa, 2016, Title VII, Chapter 70, Section 70.15, "Traffic and Parking Schedules Adopted by Reference", to make changes to street parking in the 500-700 block of W 3rd St S

Report Number: 2024-689
Date:
August 5, 2024
Lead Department:
Police
Recommendation:
Approve

Summary:
Restrict street parking for safety purposes in alignment with City policy on street parking restrictions

Financial Impact:
N/A

Background:
The City received safety concerns from citizens regarding street parking in the 500-700 blk of W 3rd St S. The complaints are a result of vehicles being parked on west side of streets that is too narrow to allow the current parking capacity and consistently allow vehicles free and safe passage. A primary concern is that emergency vehicles may not be able to travel through this area on emergency calls and there is a heightened risk of motor vehicle and pedestrian accidents as a result of the current parking design.

The 500-700 blk of W 3rd St S is only 23 feet wide and is not wide enough to safely accommodate parking on west side of the street, and allow space for vehicle traffic to safely yield to oncoming traffic with vehicles parked on the west side of the street. The City of Newton Traffic Safety Committee has reviewed the situation and, based on the existing policy for street parking restrictions, recommends restricting parking on both sides of the street.

Surveys describing the recommended changes were sent to the 28 adjacent property owners along W 3rd St S. Surveys were returned with seven (7) residents agreeing with the recommended changes and two (2) opposing the recommended changes.

Recommendation:
Staff recommends approval of this ordinance.

Matt Muckler, City Administrator

ORDINANCE NO. _____

ORDINANCE AMENDING THE CODE OF ORDINANCES, CITY OF NEWTON, IOWA, 2016, TITLE VII, CHAPTER 70, SECTION 70.15, "TRAFFIC AND PARKING SCHEDULES ADOPTED BY REFERENCE", TO MAKE CHANGES TO STREET PARKING IN THE 500-700 BLOCK OF WEST THIRD STREET SOUTH.

BE IT ORDAINED BY THE CITY COUNCIL OF THE CITY OF NEWTON, IOWA:

Section 1. The Code of Ordinances, City of Newton, Iowa, 2016, Title VII, Chapter 70, Section 70.15, "Traffic and Parking Schedules Adopted by Reference" is hereby amended by adding or ~~deleting~~ the following:

NO PARKING ZONES. No one shall stop, stand or park a vehicle in any of the following specifically designated no parking zones except when necessary to avoid conflict with other traffic or in compliance with the direction of a peace officer or traffic control signal.

STREETS, SOUTHWEST QUADRANT

West Third Street South

"No Parking Anytime".

West side from South Second Avenue West south to South Fifth Avenue West.

East side from South ~~Fifth~~ Eighth Avenue West south to South Eleventh Avenue West.

Both sides from South Fifth Ave West south to South Eighth Avenue West.

Section 2. Repealer Clause. All ordinances or parts of ordinances in conflict herewith are hereby repealed.

Section 3. Severability Clause. If any section, provision or part of this ordinance shall be adjudged invalid or unconstitutional, such adjudication shall not affect the validity of the ordinance as a whole or any section, provision or part thereof not adjudged invalid or unconstitutional.

Section 4. Effective. This ordinance shall be effective on _____, 2024, after the final passage, approval and publication as provided by law.

PASSED this ____ day of _____, 2024.

APPROVED this ____ day of _____, 2024.

(SEAL)

_____
Evelyn George, Mayor

ATTEST:

_____
Katrina Davis, City Clerk

I, Katrina Davis, City Clerk of the City of Newton, Iowa, do hereby certify that the foregoing Ordinance was passed and approved by the City Council of the City of Newton, Iowa on the ____ day of _____, 2024 and was published in the Newton Daily News, a newspaper of general circulation in the said City of Newton on the _____ day of _____, 2024.

Dated this ____ day of _____, 2024.

_____
Katrina Davis, City Clerk

Parking Survey 500-700 block W 3rd St S.

Please complete the survey to the City of Newton's recommendation to restrict parking on both sides of 500-700 block and return to the City of Newton Police Department by July 9th, 2024.

I agree with the proposed parking changes

I oppose the proposed parking changes

Comments from resident at: 602 W 3rd St S

Traffic needs a speed trap or something from all persistent street racers. But some only have that available to park. If people slowed down it would help.

Parking Survey 500-700 block of W 3rd St S.

Please complete the survey to the City of Newton's recommendation to restrict parking on both sides of 500-700 block and return to the City of Newton Police Department by July 9th, 2024.

agree with the proposed parking changes

oppose the proposed parking changes

Comments from resident at: 311 S 6th Ave W

We agree.

Parking Survey 500-700 block of W 3rd St S.

lease complete the survey to the City of Newton's recommendation to estrict parking on both sides of 500-700 block and return to the City of ewton Police Department by July 9th, 2024.

agree with the proposed parking changes

oppose the proposed parking changes

Comments from resident at: 627 W 3rd St S

We lived here 4 years and now that city doing road work it's an issues and city thinks something needs done. has to may leave it alone. People have friends City laws

UNITED STATES POSTAGE
PITNEY BOWES
02 1P $ 000.53⁰
0000915132 JUN 18 2024
ZIP CODE 50208

Newton Police Department

101 W. 4th St. S.

Newton, IA 50208

UNITED STATES POSTAGE
PITNEY BOWES
02 1P $ 000.53⁰
0000915132 JUN 18 2024
ZIP CODE 50208

Newton Police Department

101 W. 4th St. S.

Newton, IA 50208

UNITED STATES POSTAGE
PITNEY BOWES
02 1P $ 000.53⁰
0000915132 JUN 18 2024
MAILED FROM ZIP CODE 50208

Newton Police Department

101 W. 4th St. S.

Newton, IA 50208

Parking Survey 500-700 block W 3rd St S.

lease complete the survey to the City of Newton's recommendation to res
arking on both sides of 500-700 block and return to the City of Newton Po
epartment by July 9th, 2024.

agree with the proposed parking changes

oppose the proposed parking changes

Comments from resident at: **626 W 3rd St S**

I see it every day. NOT safe

Ken McCallum

Parking Survey 500-700 block of W 3rd St S.

Please complete the survey to the City of Newton's recommendation to restrict parking on both sides of 500-700 block and return to the City of Newton Police Department by July 9th, 2024.

I agree with the proposed parking changes

I oppose the proposed parking changes

Comments from resident at: **702 W 3rd St S**

Thank you!!

It has been awful + dangerous for years. It is hard to get out of our drive + there are constant traffic jams - People park in the street that have drive-ways. We have about been hit head on many times

Parking Survey 500-700 block of W 3rd St S.

Please complete the survey to the City of Newton's recommendation to restr
parking on both sides of 500-700 block and return to the City of Newton Poli
Department by July 9th, 2024.

I agree with the proposed parking changes

I oppose the proposed parking changes

Comments from resident at: **620 W 3rd St S**

Since my house is on top of the hill and cars are parked accross it is a visual hazard of oncoming traffic. Also most days it can be har getting out of my driveway. I'm okay with no parking or schedule parking at certain time of

Parking Survey 500-700 block of W 3rd St S.

Please complete the survey to the City of Newton's recommendation to restrict parking on both sides of 500-700 block and return to the City of Newton Police Department by July 9th, 2024.

I agree with the proposed parking changes

I oppose the proposed parking changes

Comments from resident at: **714 W 3rd St S**

It has become so congested with everyone who parks on the street. Hope this moves forward!

Parking Survey 500-700 block W 3rd St S.

Please complete the survey to the City of Newton's recommendation to res
parking on both sides of 500-700 block and return to the City of Newton Po
Department by July 9th, 2024.

I agree with the proposed parking changes

I oppose the proposed parking changes

William Robert Whi
508 West 3rd St. Soutl
Newton, Iowa 50208-46
U.S.A.

Comments from resident at: **508 W 3rd St S**

Yes, please do restrict parking on both sides of the stre as mentioned.

Wm R White

Parking Survey 500-700 block of W 3rd St S.

Please complete the survey to the City of Newton's recommendation to restrict parking on both sides of 500-700 block and return to the City of Newton Police Department by July 9th, 2024.

I agree with the proposed parking changes

I oppose the proposed parking changes

Comments from resident at: **520 W 3rd St S**

It should not be up for discussion as it has always been a problem.

UNITED STATES POSTAGE
PITNEY BOWES
02 1P $ 000.53⁰
0000915132 JUN 18 2024
MAILED FROM ZIP CODE 50208

Newton Police Department

101 W. 4th St. S.

Newton, IA 50208

UNITED STATES POSTAGE
PITNEY BOWES
02 1P $ 000.53⁰
0000915132 JUN 18 2024
MAILED FROM ZIP CODE 50208

Newton Police Department

101 W. 4th St. S.

Newton, IA 50208

Dog Bite Awareness

UNITED STATES POSTAGE
PITNEY BOWES
02 1P $ 000.53⁰
0000915132 JUN 18 2024
MAILED FROM ZIP CODE 50208

Newton Police Department

101 W. 4th St. S.

Newton, IA 50208

DES MOINES IA 500
9 JUL 2024 PM 2 L

UNITED STATES POSTAGE
PITNEY BOWES
02 1P $ 000.53⁰
0000915132 JUN 18 2024
MAILED FROM ZIP CODE 50208

Newton Police Department

101 W. 4th St. S.

Newton, IA 50208

UNITED STATES POSTAGE
PITNEY BOWES
02 1P $ 000.53⁰
0000915132 JUN 18 2024
MAILED FROM ZIP CODE 50208

Newton Police Department

101 W. 4th St. S.

Newton, IA 50208

UNITED STATES POSTAGE
PITNEY BOWES
02 1P $ 000.53⁰
0000915132 JUN 18 2024
MAILED FROM ZIP CODE 50208

Newton Police Department

101 W. 4th St. S.

Newton, IA 50208

GET TO KNOW Newton

Memorandum

TO: Jarrod Wellik, Interim City Administrator

FROM: Keith A. Laube, Public Works Director

DATE: December 2, 2016

RE: Street Parking Restriction Policy

In the recent past, staff has been directed to look at street parking restrictions after receiving a request from a citizen. Most of these requests were to add "No Parking" signs on one side of the street to allow traffic to flow without meandering from each side of the street to avoid parked vehicles and/or to allow passage when two vehicles are parked directly opposite of each other.

In 2011, staff evaluated all streets in the city based on Statewide Urban Design and Specifications (SUDAS) criteria, traffic volume, and street width. Street widths are measured from back of curb to back of curb. Rural section streets with ditches have been evaluated on a case-by-case basis. The streets were placed in two categories based on traffic volume and use:

Higher volume streets (>2,500 vehicles per day), collector/arterial, and truck routes:

Parking	Minimum Street Width
one side	31 feet (provides two 11-foot travel lanes)
both sides	39 feet (provides two 11-foot travel lanes)

Lower volume streets (<2,500 vehicles per day) – local residential streets:

Parking	Minimum Street Width
one side	26 feet (provides a 17-foot open roadway)
both sides	34 feet (provides a 17-foot open roadway)

Local jurisdiction discretion for existing residential streets:

Parking	Minimum Street Width
one side	21 feet (provides a 12-foot open roadway)
both sides	31 feet (provides a 14-foot open roadway)

Two maps have been prepared. The first map shows streets where existing parking restrictions could be removed to allow for additional street parking. The second map shows streets that should have new parking restrictions to enable safe passage of traffic and provide a route for emergency vehicles.

Removal of Existing Parking Restrictions Map: The parking restrictions on some of these streets were based on traffic flows that existed due to Maytag operations (1st Street N and N 3rd Ave E) and previous school traffic patterns (E 3rd Street S). Since the current parking restrictions on the streets shown on this map do not cause any safety concerns, the parking restrictions could remain.

New Parking Restrictions Map: The majority of the proposed changes are to have parking on one side of the street instead of both sides (shown in orange on the map). Most of these streets are 25 feet wide and if two vehicles are parked directly opposite of each other, there is only 8 feet for traffic, an ambulance, or a fire truck to pass between the parked vehicles. A lane at least 12 feet wide is recommended for emergency vehicles. If vehicles are parked offset from one another, response time is decreased due a slower speed required to maneuver the emergency vehicle around the parked vehicles. The spacing of staggered parked vehicles significantly slows the speed of a long fire truck.

The streets shown in green on the map are proposed to have the parking changed from "no parking on one side" to "no parking on both sides". Some of these streets are collectors or truck routes and are not wide enough to allow parking on one side and provide two free flowing traffic lanes. For example E 12th Street N is a truck route that is 26 feet wide and currently has parking on one side. This allows for 8½-foot wide lanes for northbound and southbound traffic. For a truck route, 12-foot wide lanes are recommended.

E 4th Street S is 25 feet wide with parking on one side from 6 pm to 8 am. This allows for 8-foot wide lanes for northbound and southbound traffic between 6 pm and 8 am. For a street with this volume of traffic, 11-foot lanes are acceptable and 12-foot lanes are preferred. Evening high school events may make travel on this street difficult if vehicles are parked on one side. Also E 4th Street is a direct route to the hospital. One solution for this street would be to allow parking on one side on Saturdays, Sundays and holidays; similar to N 4th Avenue E between E 5th Street and E 15th Street.

Some streets shown in green need to have updated traffic counts prior to recommending any parking changes. These streets include W 3rd Street S, E 4th Street N, and E 8th Street N. The new traffic counts will determine whether these streets are higher volume or lower volume streets.

City of Newton Council Report

Item:
First consideration of an ordinance amending the code of ordinances, City of Newton, Iowa, 2016, Title V Public Works, By adding Chapter 53 Stormwater Utility

Summary:
Adjusting stormwater utility rates for the next five years.

Financial Impact:
An estimated additional $28,000 in FY25.

Report Number: 2024-702
Date:
August 5, 2024
Lead Department:
Public Works
Recommendation:
Approve

Background:
At the October 19, 2020, city council meeting, the Newton City Council approved the creation of a Stormwater Utility Ordinance, which was the result of the City of Newton's need for funds to be dedicated to the sole purpose related to stormwater activities, such as administering the design, construction, maintenance, and operation of the utility system, including capital improvements. These items may also include but are not limited to acquiring, constructing, leasing, owning, operating, maintaining, extending, expanding, replacing, cleaning, dredging, repairing, conducting, managing, and financing such facilities, operations, and activities, as are deemed by the City to be proper and reasonably necessary for a system of storm and surface water management. These facilities may include, but are not limited to, surface and underground drainage facilities, storm sewers, watercourses, ponds, ditches, and other facilities relating to collection, runoff, treatment, and retention.

Since the ordinance's creation, numerous projects have been completed or are under construction, including the completion of a Storm Water Capital Improvement Planning Study, additional storm water improvements on the Union Drive Reconstruction Project, stormwater improvements on the W 4th St S Reconstruction Project, Fairmeadows North Plat 7 stormwater improvements, and numerous infrastructure improvements completed by Public Works Operations staff.

The ordinance established the Equivalent Residential Unit (ERU) as the equivalent of Four Thousand (4,000) square feet of impervious area as the official unit of measurement.

The ERU rate for residential and non-residential properties was as follows:
Commencing January 1, 2021, the ERU rate shall equal $4.00
Commencing July 1, 2022, the ERU rate shall equal $4.25
Commencing July 1, 2023, the ERU rate shall equal $4.50

The initial ordinance did not include additional rate increases, and future increases will be determined by ordinance of the city council.

Stormwater rates need to be increased yearly to keep pace with increasing operating costs and infrastructure replacement, repairs, capital projects, and equipment. A twenty-five cent rate increase is proposed each year for five years, effective July 1, 2025-2029. Small rate increases periodically to keep up with inflation help avoid a large rate increase at a later date.
The proposed twenty-five cent rate increase to the ERU for residential and non-residential properties would be as follows:
Commencing July 1, 2025, the ERU rate shall equal $4.75
Commencing July 1, 2026, the ERU rate shall equal $5.00

Commencing July 1, 2027, the ERU rate shall equal $5.25
Commencing July 1, 2028, the ERU rate shall equal $5.50
Commencing July 1, 2029, the ERU rate shall equal $5.75

Recommendation:

Approval of the Ordinance increasing stormwater utility rates by twenty-five cents each year for five years. If adopted, the rate would go into effect on July 1, 2025-2029.

Matt Muckler, City Administrator

ORDINANCE NO. _____

ORDINANCE AMENDING THE CODE OF ORDINANCES, CITY OF NEWTON, IOWA, 2016, TITLE V PUBLIC WORKS, BY ADDING CHAPTER 53 STORMWATER UTILITY.

BE IT ORDAINED BY THE CITY COUNCIL OF THE CITY OF NEWTON, IOWA:

Section 1. The Code of Ordinances, City of Newton, Iowa, 2016, Title V, is hereby amended by adding the following new Chapter 53 Stormwater Utility:

CHAPTER 53, STORMWATER UTILITY

53.001 Purpose
53.002 Definitions
53.003 Creation of a Stormwater Utility
53.004 Responsibility for Stormwater Management and Drainage System
53.005 Powers of the Utility Management and Drainage System
53.006 Organization
53.007 Requirements for On-Site Stormwater
53.008 Establishment of the Equivalent Residential Unit ("ERU") Square Foot Equivalent
53.009 Determination of ERU
53.010 Stormwater Utility Charge and Billing Procedures
53.011 ERU Rate
53.012 Powers of Director of the Stormwater Utility
53.013 Appeals
53.014 Exemptions to Stormwater Service Charges

General Provisions

53.001 PURPOSE.

In order to protect, maintain and enhance the environment of the City and the health, safety and welfare of the public by controlling discharges and pollutants into the City's stormwater system. This chapter establishes a policy, procedure, and enforcement mechanism for managing and controlling the quantity and quality of stormwater runoff, within the city limits of Newton, Iowa. The management shall include the establishment of a stormwater utility to provide revenues for whatever aspects of this requirement are deemed appropriate by the City.

The function of the Stormwater Utility is to provide for the safe and efficient capture of stormwater runoff, mitigate the damaging effects of stormwater runoff, correction of stormwater problems, to fund activities of stormwater management including design, planning, regulations, construction and education.

The city finds, determines and declares that the stormwater drainage system provides benefits and services to all property within the city limits. Such benefits include, but are not limited to: the provision of adequate systems for collection, conveyance, detention, treatment and release of stormwater for quality and quantity management that minimize impacts on receiving waters.

53.002 DEFINITIONS.

AGRICULTURAL PROPERTY(IES) shall mean those lots or parcels of real estate used as a "farm", as defined by the state of Iowa and listed on Jasper County Assessor's website. Agricultural properties may or may not contain a dwelling unit(s) and/or other buildings or structures.

CITY means the City of Newton, Iowa.

CITY ADMINISTRATOR means the City Administrator of the City or his/her designee.

CLASSIFICATION OF REAL ESTATE shall be classified as defined in the Iowa Administrative Code chapter 71, 701-71 Assessment Practices And Equalization, 701-71.1 Classification of real estate.

COMMERCIAL PROPERTY(IES) shall mean those properties which have been classified by the state of Iowa and listed on Jasper County Assessor's website as primarily used for commercial purposes. Commercial properties shall also include properties with mixed commercial and residential uses.

DEVELOPED PROPERTY A property altered from its natural state by the construction or installation of a structure thus increasing the amount of rainwater or surface water runoff.

DIRECTOR shall mean the Public Works Director / director of the stormwater utility.

EQUIVALENT RESIDENTIAL UNIT (ERU) Shall mean the average impervious area of a residential property within the city, and shall be used as the basis for determining stormwater utility charges to residential properties as set forth in this division.

EXEMPT PROPERTIES Shall mean those properties classified as exempt from property taxes by the County Assessor.

FACILITY means the premises on which industrial, commercial and/or land disturbing activity occurs.

GROUNDWATER Subsurface water or water stored in pores, cracks, and crevices in the ground.

IMPERVIOUS AREA The number of square feet of hard surfaced areas which either prevent or resist the entry of water into soil surface, as it entered under natural conditions as undeveloped property, and/or cause water to run off the surface in greater quantities or at an increased rate of flow from what would be present under natural conditions as undeveloped property. This includes, but is not limited to, roofs, roof extensions, patios, porches, driveways, sidewalks, pavement, athletic courts, and semi-impervious surfaces such as gravel which are used as driveways or parking lots.

INDUSTRIAL PROPERTIES shall mean those properties which have been classified as primarily used for industrial purposes as defined by the state of Iowa and listed on Jasper County Assessor's website.

MULTI-FAMILY RESIDENTIAL shall mean those properties which have been classified as primarily used for multi-family purposes as defined by the state of Iowa and listed on Jasper County Assessor's website. These properties containing a structure or structures which contain(s) multi-family residential units, designed for occupancy by multiple families for the purpose of residing in, including but not limited to Mobile home parks, Manufactured home communities, Land-leased communities, assisted living facilities, and other property primarily used or intended for human habitation containing three or more separate dwelling units.

OCCUPANT The person residing or doing business on the property. In a family or household situation, the person responsible for the obligation imposed shall be the adult head of the household. In a shared dwelling or office situation, the adult legally responsible for the management or condition of the property shall be responsible.

OWNER The legal owner(s) of record as shown on the tax rolls of the city of Newton, except where there is a recorded land sale contract, the purchaser thereunder shall be deemed the owner.

RESIDENTIAL Developed property containing a structure which contains one or more bedrooms, with a bathroom and kitchen facilities, designed for occupancy by one family. Residential units include all single-family and duplex properties for the purpose of residing in, within the city of Newton.

STORM DRAIN SYSTEM means publicly-owned facilities by which stormwater is collected and/or conveyed, including, but not limited to any roads with drainage systems, municipal streets, gutters, discharges, curbs, inlets, piped storm drains, pumping facilities, retention and detention basins, natural and man-made or altered drainage channels, reservoirs or other drainage structures.

STORMWATER means any surface, flow, runoff, snowmelt runoff and drainage consisting entirely of water from any form of natural precipitation, and resulting from such precipitation.

STORM SEWER A sewer, which carries stormwater, surface runoff, street wash waters, and drainage, but which excludes sanitary sewage and industrial wastes, other than permitted discharges.

STORMWATER DRAINAGE SYSTEM All manmade facilities, structures, and natural watercourses owned by the city of Newton, used for collection and conducting stormwater to, through, and from drainage areas to the points of final outlet including, but not limited to, any and all of the following: conduits and appurtenant features, canals, creeks, catch basins, ditches, streams, gullies, ravines, flumes, culverts, siphons, streets, curbs, gutters, dams, floodwalls, levees, and pumping stations.

STORMWATER FACILITIES Various stormwater and drainage works that may include inlets, pipes, pumping stations, conduits, manholes, energy dissipation structures, stream channels, outlets, retention/detention basins, infiltration practices and other structural components.

STORMWATER MANAGEMENT The tasks required to control stormwater runoff using stormwater management systems, to protect the health, safety, and welfare of the public, and comply with relevant state and federal regulations.

STORMWATER MANAGEMENT SYSTEMS Address the issues of drainage management (flooding) and environmental quality (pollution, erosion, and sedimentation) of receiving rivers, streams, creeks, lakes, ponds, and reservoirs through improvements, maintenance, regulation and funding of plants, works, instrumentalities and properties used or useful in the collection, retention, detention, and treatment of stormwater or surface water drainage.

STORMWATER UTILITY The utility established under this chapter for the purpose of managing stormwater and imposing charges for the recovery of costs connected with such stormwater management.

SURFACE WATER Water bodies and any water temporarily residing on the surface of the ground including lakes, reservoirs, rivers, ponds, streams, puddles, channelized flow and runoff.

UNDEVELOPED PROPERTY Land in its unaltered natural state or which has been modified to such minimal degree as to have a hydrologic response comparable to land in an unaltered natural state shall be deemed undeveloped. Undeveloped land shall have minimal concrete pavement, asphalt, or compacted gravel surfaces or structures which create an impervious surface.

USER The owner and/or occupant of any developed property within the limits of the city of Newton, and any person who uses property which maintains connection to, discharges to, or otherwise receives services from the city for stormwater management. The occupant of any habitable property is deemed the user. If the property is not occupied, then the owner shall be deemed the user.

UTILITY CHARGES The periodic rate, fee or charge applicable to a parcel of developed land, which charge shall be reflective of the service provided by the city of Newton stormwater utility. Utility charges are based on measurable parameters which influence the stormwater utility's cost of providing services and facilities, with the most important factor being the amount of impervious area on each parcel of developed land.

WATERCOURSE A natural overland route through which water passes, including drainage courses, streams, creeks, and rivers.

53.003 CREATION OF A STORMWATER UTILITY.
The function of the Stormwater Utility is to provide for the safe and efficient capture of stormwater runoff, mitigate the damaging effects of stormwater runoff, correction of stormwater problems, to fund activities of stormwater management including design, planning, regulations, education, coordination, construction, operations, maintenance, inspection and enforcement activities.
There is hereby established a stormwater utility within the City of Newton, Iowa which shall be responsible for creating revenue for stormwater management throughout the City's corporate limits, and shall provide for the management, protection, control, regulation, use, and enhancement of stormwater systems and facilities. Such utility shall be under the operational direction of the Public Works Director or his/her designee. The corporate limits of the City, as increased from time to time, shall constitute the boundaries of the stormwater utility district.
The City shall establish a Stormwater Utility Fund in the City budget and accounting system, separate and apart from its General Fund, for the purpose of dedicating and protecting all funding applicable to the purposes and responsibilities of the utility.
In order to manage additions and improvements to the city stormwater systems, the City must have adequate and stable funding for its stormwater management program operating and capital investment needs. It is determined and declared to be necessary and conducive to the public health, welfare, safety and convenience of the City and its residents that charges be levied and collected from the owners or occupants of all lots, parcels of real estate, and buildings that discharge stormwater or surface or subsurface waters, directly or indirectly, to the City stormwater drainage system, and that the proceeds of such charges so derived be used for the purposes of operation, maintenance, repair and replacement, including the payment of debt service, for construction and repair of the stormwater drainage system and flood protection improvements comprising the stormwater utility.

53.004 RESPONSIBILITY FOR STORMWATER MANAGEMENT AND DRAINAGE SYSTEM.
The City stormwater management and drainage system consists of all rivers, streams, creeks, branches, lakes, reservoirs, ponds, drainage ways, channels, ditches, swales, storm sewers, culverts, inlets, catch basins, pipes, head walls and other structures, natural or man-made that are located within public streets, rights-of-way, and easements within the political boundaries of the City of Newton which control and/or convey stormwater through which the City intentionally diverts surface waters from its public streets and properties. The City owns or has legal access for purposes of operation, maintenance and improvements to those segments of this system which are subject to easements of rights-of-entry, rights-of-access, rights-of-use, or other permanent provisions for adequate access for operation, maintenance, and/or improvement of systems and facilities.
Operation and maintenance of stormwater systems and facilities which are located on private property or public property not owned by the City of Newton and for which there has been no public dedication of such systems and facilities for operation, maintenance, and/or improvement of the systems and facilities shall be and remain the legal responsibility of the property owner.
It is the intent of this section to protect the public health, safety and general welfare of all properties and persons in general, but not to create any special duty or relationship with an individual person or to any specified property within or without the boundaries of the City of Newton. The City of Newton expressly reserves the right to assert all available immunities and defenses in any action seeking to impose monetary damages upon the City, its officers, employees and agents arising out of any alleged failure or breach of duty or relationship as may now exist or hereafter be created.

53.005 POWERS OF THE UTILITY MANAGEMENT AND DRAINAGE SYSTEM.
The stormwater management utility shall have the following powers, duties and responsibilities:

1. Prepare ordinances as needed to implement this division and place them for consideration and adoption by the City Council, and adopt such regulations and procedures as are required to implement this chapter and carry out its duties and responsibilities.

2. Administer the acquisition, design, construction, maintenance and operation of the utility system, including capital improvements.

3. Administer and enforce this chapter and all ordinances, regulations and procedures related to design, construction, maintenance, operation and alteration of the utility system, including, but not limited to the quantity, quality and/or velocity of the stormwater conveyed hereby.

4. Inspect private systems as necessary to determine the compliance of such systems with this chapter and any ordinances or regulations adopted by this chapter.

5. Review plans, approve or deny, inspect and accept extensions to the stormwater drainage system.

6. Annually analyze the cost of services and benefits provided, and the system and structure of fees, charges, fines, and other revenues of the utility, and to make recommendations regarding adjustment to such fees, charges, fines and other revenues.

7. Prepare and file an annual operating budget for the utility and make recommendations regarding the financing of the cost of extending and replacing portions of the system.

8. Acquire, construct, lease, own, operate, maintain, extend, expand, replace, clean, dredge, repair, conduct, manage, and finance such facilities, operations, and activities, as are deemed by the City to be proper and reasonably necessary for a system of storm and surface water management. These facilities may include, but are not limited to, surface and underground drainage facilities, storm sewers, watercourses, ponds, ditches, and such other facilities relating to collection, runoff, treatment and retention as will support a stormwater management system.

53.006 ORGANIZATION.
The City Council shall be the governing body of the stormwater management utility. The stormwater management utility shall be under the direction, management and control of the Public Works Director, who shall function as its director. In that capacity, the director or the director's designee shall supervise the day-to-day operation of the stormwater management utility, shall enforce this chapter and the provisions of all ordinances and regulations adopted by the City Council and shall carry out the policy directives of the City Council acting in its role as governing body of the stormwater management utility.

53.007 REQUIREMENTS FOR ON-SITE STORMWATER.

A. All property owners and developers of developed real estate property within the City of Newton shall provide, manage, maintain, and operate on-site stormwater systems sufficient to collect, convey, detain, and discharge stormwater in a safe manner consistent with all City, State, and Federal laws and regulations.

B. Pursuant to Iowa Code Section 364.12(3) or successor section of the State Code, any failure to meet this obligation may constitute a nuisance and may be subject to an abatement action filed by the City. In the event a nuisance is found to exist, which the owner fails to properly abate within such reasonable time as allowed by the City, the City may enter upon the property and complete such work as is reasonably necessary to be performed, with the actual cost thereof assessed against the owner in the same manner as a tax levied against the property. The City shall have the right, pursuant to the authority of this section, for its designated officers and employees to enter upon private and public property owned by entities other than the City, upon reasonable notice to the owner thereof, to inspect the property and conduct surveys and engineering tests thereon in order to assure compliance.

53.008 ESTABLISHMENT OF THE EQUIVALENT RESIDENTIAL UNIT("ERU") SQUARE FOOT EQUIVALENT.
For purposes of this chapter, the Equivalent Residential Unit (ERU) shall be the equivalent to Four Thousand (4,000) square feet of impervious area as measured from aerial photography.

53.009 DETERMINATION OF ERU.
Any property, lot, parcel of land, building or premises that is a tributary directly or indirectly to the stormwater system of the city, shall be subject to a fee based upon the quantity of impervious area situated thereon. This charge is not related to the water and/or sewer service and does not rely on occupancy of the premises to be in effect. All properties having impervious area within the city of Newton will be assigned an equivalent residential unit (ERU) or a multiple thereof, as calculated in this section, with all properties having any impervious area receiving at least one ERU, which shall be considered the base rate.
Residential and Multi-Family Residential Property
Single-Family Residential Property. The stormwater utility charge for single-family properties shall be one hundred percent (100%) of one ERU rate per month.
Multi-Family Properties.
The stormwater utility charge for all multi-family residential units shall be one ERU times the number of residential units for the first twenty (20) units, plus 50% ERU rate for each unit after the first twenty units until a maximum cap of 60 units is met. For instance, the stormwater utility charge for a two-family residential property shall be 2 times the ERU rate per month, the stormwater utility charge for three-family residential properties shall be 3 times the ERU rate per month and the stormwater utility charge for an 80 unit multi-family residential property shall be 20 at 100% ERU value, remaining 40 to reach the maximum cap of 60 units at 50% ERU value rate per month.
Agricultural Property
The stormwater utility charge for Agricultural properties shall be calculated as follows:
Impervious surface shall be measured to determine the square feet, then divided by the ERU equivalent of (4,000 square feet), rounded to the nearest whole number to determine number of ERU. The property will be billed at one hundred percent (100%) of the ERU rate for the first twenty (20) ERUs, plus 50% ERU rate for each ERU after the first twenty ERU's until a maximum cap is met of 60 ERU.
Commercial Property
The stormwater utility charge for Commercial properties, or a structure containing both residential and Commercial uses, shall be calculated as follows:
Impervious surface shall be measured to determine the square feet, then divided by the ERU equivalent of (4,000 square feet), rounded to the nearest whole number to determine number of ERU. The property will be billed at one hundred percent (100%) of the ERU rate for the first twenty (20) ERUs, plus 50% ERU rate for each ERU after the first twenty ERU's until a maximum cap is met of 60 ERU.
Exempt Property
The stormwater utility charge for Exempt properties shall be calculated as follows:
Impervious surface shall be measured to determine the square feet, then divided by the ERU equivalent of (4,000 square feet), rounded to the nearest whole number to determine number of ERU. The property will be billed at one hundred percent (100%) of the ERU rate for the first twenty (20) ERUs, plus 50% ERU rate for each ERU after the first twenty ERU's until a maximum cap is met of 60 ERU.

Industrial Property
The stormwater utility charge for Industrial properties shall be calculated as follows:
Impervious surface shall be measured to determine the square feet, then divided by the ERU equivalent of (4,000 square feet), rounded to the nearest whole number to determine number of ERU. The property will be billed at one hundred percent (100%) of the ERU rate up to the maximum cap of seven hundred and fifty (750) ERUs.

53.010 STORMWATER UTILITY CHARGE AND BILLING PROCEDURES.
All contributors and users shall pay a stormwater utility charge monthly as calculated pursuant to this Ordinance. For purposes of this Ordinance, the storm water utility charge which shall be payable monthly, shall be determined by multiplying the ERU applicable under Section 53.010 by the ERU rate specified in section 53.011.
The stormwater utility charge shall commence upon the earlier of the following:

A. The issuance of a certificate of occupancy. Ninety (90) days after construction is halted, provided construction is at least 50% complete in the judgment of the director.
B. Ninety (90) days after construction is completed, even if no certificate of occupancy has been issued.
C. Once the property has water meter installed.

The determination of the stormwater utility charge shall be the responsibility of the Director, or his/her designee. All stormwater utility charges are due and payable under the same terms and conditions provided for payment of a combined service account as outlined in Section 52.115 of this Code.
The owner of the premises served and the tenant or occupant thereof shall be jointly and severally liable for stormwater utility charges for the premises.
Stormwater utility charges remaining unpaid and delinquent shall constitute a lien against the premises served and shall be certified as delinquent to the County Treasurer for collection in the same manner as property taxes, or such services may be discontinued and shall not be reinstated until all claims are settled. Service may be discontinued by means of the discontinuance of the water service in the same manner provided by the rules and regulations of the Water Department in the case of delinquent water bills.

53.011 ERU RATE.
The ERU rate to be applied monthly to residential and nonresidential properties shall be as follows:

~~Commencing January 1, 2021, the ERU rate shall equal $4.00.~~
~~Commencing July 1, 2022, the ERU rate shall equal $4.25.~~
~~Commencing July 1, 2023, the ERU rate shall equal $4.50.~~

Commencing July 1, 2025, the ERU rate shall equal $4.75.
Commencing July 1, 2026, the ERU rate shall equal $5.00.
Commencing July 1, 2027, the ERU rate shall equal $5.25.
Commencing July 1, 2028, the ERU rate shall equal $5.50.
Commencing July 1, 2029, the ERU rate shall equal $5.75.

The monthly rate for each fiscal year thereafter shall be determined by ordinance of the city council prior to July 1st of each year.

53.012 POWERS OF THE DIRECTOR.
Stormwater service charges incurred pursuant to this ordinance may be collected by the stormwater utility director or designee who is also responsible for the regulation, collection, rebating and refunding of such stormwater charges.

53.013 APPEALS.
Any customer who believes the provisions of this chapter have been applied in error may appeal in the following manner:
An appeal must be filed in writing with the City of Newton, City Administrator. In the case of service charge appeals, the appeal shall include information on the total property area, the impervious surface area and any other features or conditions which influence the hydrologic response of the property to rainfall events.
Using the information provided by the appellant, the City Administrator shall conduct a technical review of the conditions on the property and respond to the appeal in writing within thirty (30) days.
In response to an appeal, the City Administrator may adjust the stormwater ERU applicable to a property in conformance with the general purpose and intent of this chapter.
The Zoning Board of Adjustment will act as a Board of Appeals to hear grievances arising from the decision of the City Administrator. The Zoning Board of Adjustment shall have no authority to waive requirements of this chapter and will only determine as to whether the requirements of this chapter were properly applied.

Written notice of an appeal shall be submitted to the Zoning Board of Adjustment, care of the Newton City Planner, and shall include appellant name, subject property address, appellant address (if different than subject property), and grounds for the appeal. The Zoning Board of Adjustment will hold a public hearing on the matter within 30 days of receipt of the written notice of appeal. All decisions of the Zoning Board of Adjustment shall be final.

53.014 EXEMPTIONS TO STORMWATER SERVICE CHARGES.

The following areas are exempt from stormwater utility service charges:

1. Undeveloped property as defined in this Ordinance.
2. Public Streets, alley ways, and highways are exempt from utility charges or connection fees.
3. Railroad rights-of-way (tracks) shall be exempt from stormwater service charges. However, railroad stations, maintenance buildings, or other developed land used for railroad purposes shall not be exempt from storm water service charges.

Section 2. Repealer Clause. All ordinances or parts of ordinances in conflict herewith are hereby repealed.

Section 3. Severability Clause. If any section, provision or part of this ordinance shall be adjudged invalid or unconstitutional, such adjudication shall not affect the validity of the ordinance as a whole or any section, provision or part thereof not adjudged invalid or unconstitutional.

Section 4. Effective. This ordinance shall be effective on _____2024, after the final passage, approval and publication as provided by law.

PASSED this ____ day of _____, 2024.

APPROVED this ____ day of _____, 2024.

(SEAL)

_____
Evelyn George, Mayor

ATTEST:

_____
Katrina Davis, City Clerk

I, Katrina Davis, City Clerk of the City of Newton, Iowa, do hereby certify that the foregoing Ordinance was passed and approved by the City Council of the City of Newton, Iowa on the ____ day of _____, 2024 and was published in the Newton Daily News, a newspaper of general circulation in the said City of Newton on the _____ day of _____, 2024.

Dated this ____ day of _____, 2024.

_____
Katrina Davis, City Clerk

City of Newton Council Report

Item:
Resolution renewing the insurance package with Iowa Communities Assurance Pool (ICAP)

Report Number: 2024-652

Date:
August 5, 2024

Summary:
Liability Insurance Renewal

Lead Department:
Administration

Financial Impact:
$652,500 from budgeted funds

Recommendation:
Approve

Background:
In June of 1998, the City Council awarded a bid for property, liability and automobile insurance coverage to Clemon-Maki Insurance Associates using the Iowa Communities Assurance Pool (ICAP). Staff recommended this action because ICAP held a AAA rating which is the highest rating possible; ICAP had coverage limits on a per claim basis as opposed to a total amount of claims basis; more than 280 other city governments in Iowa belong to the ICAP risk pool; the City has a very positive experience with a similar pool (Iowa Municipal Worker's Compensation Association); and ICAP is affiliated with the Iowa League of Cities.

The City continues to reap the same benefits from insuring through ICAP. The 2024 renewal is $652,500, up from $443,321 in 2023. The 2024 renewal is higher than 2023 due to an increase in vehicle coverage, property coverage, and to the high number of claims from the hail storm, losses, and the increased cost of construction. In 2023, we insured $7,904,511 in vehicle value, costing $51,545. In 2024, the vehicle value increased to $8,351,948, at a cost of $81,691. In 2023, we insured $152,791,153 in property value, costing $250,039. In 2024, the property value increased to $170,416,857, at a cost of $418,374. The remaining increase came from liability insurance at approximately $13,000. These types of rate increases are happening all across the insurance industry. The amount may vary slightly throughout the year depending on equipment and property values with purchases and sales.

Recommendation:
Staff recommends renewing the insurance package with Iowa Communities Assurance Pool

Matt Muckler, City Administrator

RESOLUTION NO. 2024 - _____

RESOLUTION RENEWING THE INSURANCE PACKAGE WITH IOWA COMMUNITIES ASSURANCE POOL (ICAP)

WHEREAS, the City of Newton has contracted with Iowa Communities Assurance Pool (ICAP) through the local insurance agency Clemon-Maki since 1998; and

WHEREAS, the renewal comes due July 1, of each year; and

WHEREAS, the 2024 renewal is higher than 2023 due to an increase in the vehicle and property coverage as well as ICAP not issuing a surplus refund this year due to the high amount of claims from the hail storm, losses, and the increased cost in construction. The amount may vary slightly throughout the year depending on equipment and property values with purchases and sales;

NOW, THEREFORE, BE IT RESOLVED by the City Council of the City of Newton, Iowa, that staff is authorized to renew the contract with ICAP in the amount of $652,500.

PASSED this _____ day of August 2024.

APPROVED this _____ day of August 2024.

_____
Evelyn George, Mayor

(SEAL)

ATTEST:

_____
Katrina Davis, City Clerk

City of Newton Council Report

Item:
Resolution approving the granting of Downtown Improvement Grant funds for 306 1st Avenue West, Newton, Iowa, in the sign, façade, and awning program areas

Summary:
Downtown improvement grants to support new signage, awning, and facade improvements (storefront door).

Financial Impact:
$3,178.47 total grant funds for all program areas

Report Number: 2024-682
Date:
August 5, 2024
Lead Department:
Community Development
Recommendation:
Approve

Background:

Proposal: Awning, Signage, Exterior Door to support a new business, Urban Nails, in the commercial tenant space.

Building Background: Historically known as Bridges Auto Supply, the building at 306 1st Avenue W is a contributing structure to the Downtown Historic District. It retains a generally high level of historic integrity and reflects a significant historic period in the life of the community when a major transportation route through Central Iowa ran through Newton. The present façade is considered historic and its level of integrity as it relates to design, workmanship, and materials is high. The building is significant in its ability to contribute to our understanding of the evolution of automobile transportation in small towns in Iowa.

Project Review:

Proposed Project	Project Area	Estimated Cost	1:1 Match Amount	Maximum Allowed	Less Previous Award	Recommended Grant
Painted Sign for First Avenue Loft	Sign	2,909.96	$1,455	$750	$0	$750.00
Signage for Commercial Tenant	Sign	1,738.78	$869.39	$750	$0	$750
Commercial Tenant Exterior Door	Façade	1,714.44	$857.22	$5,000	$0	$857
Awning	Awning	1,642.49	$821.25	$2,500	$0	$821.25
						$3,178.47

Awning: The applicant proposes a small decorative awning over the exterior entrance door for the new commercial tenant. While modern in design, its proposed color and scale are complimentary to the structure.

Signage: New signage is proposed for both “tenants” of the building- the First Avenue Loft and Urban Nails. The applicant is proposing painted sign elements to the building, and each “tenant” is

allowed a sign grant. For the First Avenue Loft, the applicant is proposing painting the inset area in the upper story black with white lettering. For the Urban Nails Storefront, white lettering will be painted on the existing black area above the windows. The First Avenue Loft signage evokes a similar feel to that of the Historic Maytag Buildings 1 and 2.

Exterior Door: The proposed new storefront door aligns with recommendations of the design guidelines by making “the first impression count” and “retaining the original door opening.”

Recommendation:
Staff recommends approval

Matt Muckler, City Administrator

RESOLUTION NO. 2024 – _____

RESOLUTION APPROVING THE GRANTING OF DOWNTOWN IMPROVEMENT GRANT FUNDS FOR 306 1ST AVENUE WEST, NEWTON, IOWA IN THE SIGN, FAÇADE, AND AWNING PROGRAM AREAS

WHEREAS, *Envision Newton 2042* recognizes the role of the Downtown as the heart of the community and recommends a focus on curb appeal and community aesthetics; and

WHEREAS, bonded funds were set aside for the purpose of downtown improvements, providing the funding source for the Downtown Improvement Grant Program; and

WHEREAS, Randy/Marilyn Terlouw and Ella Nguyen submitted an application requesting funds for 306 1st Avenue West, Newton in the signage, awning, and façade improvement program areas for the two building occupants- First Avenue Loft and Urban Nails;

WHEREAS, The Downtown Grant Review Board reviewed the application on July 17, 2024;

NOW THEREFORE, BE IT RESOLVED by the City Council of Newton, Iowa, that the Downtown Improvement Grant Funds in an amount up to $1,571.254 be provided to Randy and Marilyn Terlouw, First Avenue Loft at 306 1st Avenue West, Newton, for the signage and awning program areas;

BE IT FURTHER RESOLVED by the City Council of Newton, Iowa, that Downtown Improvement Grant funds in an amount up to $1,607.00 be provided to Ella Nguyen, Urban Nails, 306 1st Avenue West, Newton, for the façade and signage program areas.

PASSED this _____ day of August, 2024.

APPROVED this _____ day of August, 2024.

_____
Evelyn George, Mayor

ATTEST:

_____
Katrina Davis, City Clerk

Downtown Façade Grant Program Agreement
Between City of Newton and Randy & Marilyn Terlouw, Ella Nguyen

This Agreement made and entered into this _____ day of _____ 2024 by and between the City of Newton, Iowa, hereinafter called "City" and Randy & Marilyn Terlouw and Ella Nguyen, Urban Nails, 306 1st Avenue West Newton, Iowa, hereinafter called "Applicants."

WHEREAS, the Applicants submitted an application to receive Downtown Improvement Grant funds in the Signage, Awning, and Facade Areas for property located at 306 1st Avenue West, Newton; and

WHEREAS, the Downtown Grant Review Board reviewed the application and recommended approval provided the color selection aligned with the Downtown District Design Guidelines;

NOW, THEREFORE BE IT UNDERSTOOD AND AGREED:

1.) Randy & Marilyn Terlouw will receive **up to $1,571.25** in grant funds for the First Avenue Loft Signage and Awning project at 306 1st Avenue West.
2.) Ella Nguyen will receive **up to $1,607.00** in grant funds for the Urban Nails signage and storefront door project.
3.) All projects shall be completed within 1 year of the agreement.
4.) The City of Newton will provide the grant funding as a reimbursement of completed work.
    a. Copies of all receipts for each project area shall be submitted to the City of Newton Community Development Department, 303 West 4th Street North, Suite 501, Newton, Iowa 50208 for administrative verification of expenditures and applicant match.

5.) The applicants will match provide a 1:1 match to the grant funds,

6.) The City will make timely payment of grant funds upon completion of the project and verification of project expenses.

Applicant:

_____ _____

Randy Terlouw Date
Owner

_____ _____

Marilyn Terlouw Date
Owner

_____ _____

Ella Nguyen Date
Urban Nails Business Owner

For City of Newton:

_____ _____

Evelyn George, Mayor Date

City of Newton Council Report

Item:
Resolution approving plans, specifications, and form of contract, and ordering clerk to publish notice for a public hearing on plans, specifications, form of contract, and estimate of costs for the Westwood Golf Course Clubhouse Project

Report Number: 2024-684
Date:
August 5, 2024
Lead Department:
Public Works
Recommendation:
Approve

Summary:
Accept plans and ordering clerk to publish a notice for a public hearing for the Westwood Golf Course Clubhouse Project.
Financial Impact:
$283,520.25 to be paid from ARPA funds

Background:
On September 13, 2022, Newton residents approved a park bond referendum, which included the construction of a new clubhouse at the Westwood Golf Course. Architectural plans were prepared, and bids were received on August 17, 2023. Due to the high bid prices received, the bids were then rejected by the City Council on September 5, 2023. City staff then began working on an alternate plan to construct a more affordable clubhouse, which would include phasing of the preliminary projects and which would satisfy the language of the bond referendum.

Previous projects, including asbestos abatement, demolition, site grading, and utilities, have been completed. This project will construct footings in preparation for the setting and construction of a 60' X 100' post-frame building by Morton Buildings, Inc. After the completion of the Morton Buildings, Inc. project, this project will continue with spray foam insulation within exterior walls, aluminum storefront systems, exterior openings, rigid insulation, roof insulation and standing seam roof panels with required accessories, including gutter and downspouts.

ISG has prepared plans and specifications and placed them out for bid. The proposed bid opening will occur on August 12, 2024, and the public hearing to accept bids and award the work will take place at the regularly scheduled council meeting on April 19, 2024. The specified completion date for this project is December 6, 2024.
Recommendation:
City staff recommends approval to accept the plans, set dates for the public hearing and bid opening, and obtain bids for the Westwood Golf Course Clubhouse Project.

Matt Muckler, City Administrator

RESOLUTION NO. 2024 – _____

RESOLUTION APPROVING PLANS, SPECIFICATIONS, AND FORM OF CONTRACT, AND ORDERING CLERK TO PUBLISH NOTICE FOR A PUBLIC HEARING ON PLANS, SPECIFICATIONS, FORM OF CONTRACT, AND ESTIMATE OF COSTS FOR THE WESTWOOD GOLF COURSE CLUBHOUSE PROJECT

WHEREAS, on September 13, 2022, Newton residents approved a park bond referendum, which included the construction of a new clubhouse at the Westwood Golf Course; and

WHEREAS, previous projects, including asbestos abatement, demolition, site grading, and utilities, have been completed. This project will construct footings in preparation for the setting and construction of a 60' X 100' post-frame building by Morton Buildings, Inc.; and

WHEREAS, after the completion of the Morton Buildings, Inc. project, this project will continue with spray foam insulation within exterior walls, aluminum storefront systems, exterior openings, rigid insulation, roof insulation, and standing seam roof panels with required accessories, including gutter and downspouts; and

WHEREAS, plans and specifications have been prepared by ISG and are ready to be placed out for bid; and

WHEREAS, the total cost estimate is $283,520.25.

NOW, THEREFORE, BE IT RESOLVED that the detailed plans and specifications as prepared by ISG for the Westwood Golf Course Clubhouse Project in the City of Newton, Iowa, to be paid from ARPA funds and the form of contract and Notice of Public Hearing, be and the same are hereby approved, subject to hearing thereon, and are hereby ordered placed on file in the office of the City Clerk for public inspection; and

That the City Clerk is hereby directed to advertise for bids for the construction of said improvements. Bids will be received and opened at the office of the Public Works Director at 11:00 AM on the 12th day of August 2024. There the bids will be referred to the City Council for action upon said bids at a future meeting to be held at the Council Chambers, Newton, Iowa. Notice to Bidders is to be published not less than thirteen (13) calendar days nor more than forty-five (45) days prior to the date fixed for said bid opening in the following: 1) a relevant contractor plan room service with statewide circulation, 2) a relevant construction lead generating service with statewide circulation and 3) the City of Newton website; and

That the Council hold a public hearing on the matter of the adoption of proposed plans, specifications, and form of contract for the making of said improvements, which documents are now on file in the office of the City Clerk, said hearing to be held at the Council Chambers in the City Hall, Newton, Iowa, on the 19th day of August 2024, at 6:00 pm, and that the City Clerk give notice of said hearing by publication once in a local legal newspaper, printed wholly in English language, not less than four (4) clear days nor more than twenty (20) days prior to the date fixed therefore.

PASSED this _____ day of August, 2024

APPROVED this ____ day of August, 2024.

_____
Evelyn George, Mayor

ATTEST:

_____
Katrina Davis, City Clerk

City of Newton Council Report

Item:
Resolution awarding a contract for the Westwood Golfcourse Clubhouse shell

Report Number: 2024-685

Date:
August 5, 2024

Summary:
Award a contract for the Westwood Golf Course Clubhouse shell

Lead Department:
Public Works

Financial Impact:
$190,338.00 to be paid from ARPA funds

Recommendation:
Approve

Background:
On September 13, 2022, Newton residents approved a park bond referendum, which included the construction of a new clubhouse at the Westwood Golf Course. Architectural plans were prepared, and bids were received on August 17, 2023. Due to the high bid prices received, the bids were then rejected by the City Council on September 5, 2023. City staff then began working on an alternate plan to construct a more affordable clubhouse, which would include phasing of the preliminary projects and which would satisfy the language of the bond referendum.

Previous projects, including asbestos abatement, demolition, site grading, and utilities, have been completed. City staff is currently seeking bids for a separate project to construct footings and other accompanying improvements for this building. That project will also include interior improvements, including spray foam insulation within exterior walls, aluminum storefront systems, exterior openings, rigid insulation, roof insulation, and standing seam roof panels with required accessories, including gutters and downspouts.

ISG, on behalf of the City of Newton, sought competitive quotes from Morton Buildings, Inc. and Greiner Buildings for a post-frame 60' X 100' building following Iowa Code Chapter 26. Morton Buildings, Inc. supplied the lowest quote of $190,338.00, which was $1,212.00 lower than Greiner Buildings, even with the addition of a $5,000 bond.

The project is to be completed this fall to allow time for the accompanying project to be completed before December 6, 2024. The $190,338.00 project cost will be paid from ARPA funds.

Recommendation:
City staff recommends that Council award the project to Morton Buildings, Inc. of Des Moines, IA for the amount of $190,338.00

Matt Muckler, City Administrator

RESOLUTION 2024- _____

RESOLUTION AWARDING CONTRACT FOR WESTWOOD GOLF COURSE CLUBHOUSE SHELL

WHEREAS, Newton residents approved a park bond referendum, which included the construction of a new clubhouse at the Westwood Golf Course; and

WHEREAS, bids were received on August 17, 2023. Due to the high bid prices received, the bids were then rejected by the City Council on September 5, 2023. City staff then began working on an alternate plan to construct a more affordable clubhouse, which would include phasing of the preliminary projects and which would satisfy the language of the bond referendum; and

WHEREAS, previous projects, including asbestos abatement, demolition, site grading, and utilities, have been completed. City staff is currently seeking bids for a separate project to construct footings and other accompanying improvements for this building; and

WHEREAS, ISG, on behalf of the City of Newton, sought competitive quotes from Morton Buildings, Inc. and Greiner Buildings for a post-frame 60' X 100' building following Iowa Code Chapter 26. Morton Buildings, Inc. supplied the lowest quote of $190,338.00, which was $1,212.00 lower than Greiner Buildings, even with the addition of a $5,000 bond; and

WHEREAS, City staff recommends that the City of Newton award a contract to Morton Buildings, Inc. of Des Moines, IA, for the Westwood Golf Course Clubhouse Shell based on the quote received in the amount of $190,338.00.

NOW, THEREFORE, BE IT RESOLVED, by the City Council of Newton, Iowa, that the quote of Morton Buildings, Inc. of Des Moines, IA, in the amount of One Hundred and Ninety Thousand, Three Hundred Thirty-Eight Dollars and Zero Cents ($190,338.00) for the Westwood Golf Course Clubhouse Shell, all as described in the request for quotations package, is hereby accepted.

BE IT FURTHER RESOLVED, by the City Council of the City of Newton, Iowa, that the Contract executed by Morton Buildings, Inc. of Des Moines, IA, for the Westwood Golf Course Clubhouse Shell as described in the request for quotations package, said contract to be signed by the Mayor and City Clerk on behalf of the City, be and the same are hereby approved. The City shall utilize ARPA funds to pay for the construction.

PASSED this _____ day of August, 2024.

APPROVED this _____ day of August, 2024.

_____
Evelyn George, Mayor

ATTEST:

_____
Katrina Davis, City Clerk

City of Newton Council Report

Item:
Resolution approving Marketing Agreement with Utility Service Partners Inc

Summary:
approving marketing agreement and utilizing City of Newton's branding

Financial Impact:
No cost to the City to participate and the City would receive 10% of the premiums collected, paid annually.

Report Number: 2024-691
Date:
August 5, 2024
Lead Department:
Utilities
Recommendation:
Approve

Background:
The National League of Cities (NLC) Service Line Warranty Program, offered by Utility Service Partners, a HomeServe Company, was conceived in partnership with the National League of Cities to educate property owners about their service line responsibilities and to help residents avoid the out-of-pocket expense for unanticipated and potentially costly service line repairs and replacements. Our program, the only one of its kind endorsed by the NLC and the Iowa League of Cities and, will help the City of Newton achieve its goals by:

- Providing homeowners affordable protection against significant and unexpected costs to remedy leaking/broken/ clogged water lines, sewer lines, and in-home plumbing lines.
- Ensuring the delivery of timely, high-quality repair services in adherence to all applicable codes
- Providing exemplary service that reflects positively on the City.
- The program generates an ongoing, sustainable source of revenue for partner municipalities and stimulates the local economy by using fully vetted local contractors to complete the repairs.
- The City will receive a royalty 10% of the premiums collected.

COVERAGE: NLC Service Line Warranty Program offers three complete and separate voluntary programs. There is never a service fee/deductible or annual or lifetime limit. Residents can cancel the warranties at any time.

Exterior Water Service Line: Includes service to locate, excavate and repair/replace a leaking exterior water service line. Covered repairs include, but are not limited to leaks, breaks, corrosion, blockages, root intrusion, and other types of damage (such as from freezing) that impair or limit the intended function of the system. Includes thawing of frozen water lines. Includes restoration of ground surface features after excavation for service line repair, including filling, raking, reseeding, reinstallation of existing soft landscaping and shrubbery, and patching of paved surfaces.

Exterior Sewer Service Line: Includes services to locate, excavate and repair/replace a leaking exterior sewer service line. Covered repairs include, but are not limited to leaks, breaks, corrosion, blockages (due to fats, oils and grease), root intrusion, and other types of damage (such as from freezing) that impair or limit the intended function of the system. Includes restoration of ground surface features after excavation for service line repair, including filling, raking, reseeding, reinstallation of existing soft landscaping and shrubbery, and patching of paved surfaces.

Internal Plumbing and Drainage: Coverage includes the emergency breakdown costs of repairing or replacing interior water, sewer, and drainage pipe materials, valves and other plumbing-related material, including unblocking, repair and replacement. Repair of clogged toilets.

IMPLEMENTATION: The NLC Service Line Program will utilize the City logo to brand the materials used to educate City residents/customers about our repair service plans. Program marketing literature clearly discloses that the Program and the City are separate entities and that the program is voluntary for residents. The NLC Service Line Warranty Program will create all marketing materials with input from the City and will submit all marketing/communications materials to the City for final approval.

ENROLLMENT AND BILLING: The NLC Service Line Program offers residents simple options if they choose to enroll either via mail, phone, or web. We handle all customer billing and residents can choose annual, quarterly, or monthly billing and may pay by check, direct debit/ACH, or credit card. Once we receive the enrollment application, customers receive a welcome letter which includes their service agreement terms and conditions, their payment details, a reiteration of their policy coverage, and our toll-free customer service number. Customers also receive a welcome call from customer service as an additional, personalized confirmation of the program. We handle all customer billing, and a homeowner can enroll or cancel at any time.

Recommendation:

City Council authorize the Mayor enter into the royalty Marketing agreement with Utility Service Partners, Inc. (USP) for an initial term of three (3) years, subject to City Attorney review with an additional (1) year renewal.

Matt Muckler, City Administrator

RESOLUTION NO. 2024-_____

RESOLUTION APPROVING MARKETING AGREEMENT WITH UTILITY SERVICE PARTNERS INC.

WHEREAS, this MARKETING AGREEMENT ("**Agreement**") is entered into and made effective by and between the City of Newton, Iowa ("**City**"), and Utility Service Partners Private Label, Inc. d/b/a Service Line Warranties of America ("**SLWA**," and together with City, the "**Parties**," and each, a "**Party**"); and

WHEREAS, individual residential property owners ("**Customer(s)**") residing in the City own and are responsible for sewer and water lines between the mainlines and the connection on their property; and

WHEREAS, City desires to announce to Customers the opportunity, but not the obligation, to purchase plans as set forth in Exhibit A or as otherwise mutually agreed by the Parties in writing (including by email) ("**Plan(s)**") to repair such lines; and

WHEREAS, SLWA, a subsidiary of HomeServe USA Corp. ("**HomeServe**"), is the administrator of the National League of Cities (**"NLC"**) Service Line Warranty Program.

NOW, THEREFORE, by the City Council of Newton, Iowa, authorizes the Mayor to enter into a Marketing Agreement with Utility Service Partners Inc. as described in the Marketing Agreement and Exhibit "A" Marketing Agreement, City of Newton, Term Sheet.

PASSED this _____ day of August 2024.

APPROVED this _____ day of August 2024.

_____

Evelyn George, Mayor

ATTEST:

_____

Katrina Davis, City Clerk

RECOMMENDATION: It is recommended that Mayor and City Council authorize the Administration, or their designee, to enter into the royalty Marketing agreement with Utility Service Partners, Inc. (USP) for an initial term of three (3) years, subject to City Attorney review with an additional (1) year renewal.

BACKGROUND: The National League of Cities (NLC) Service Line Warranty Program, offered by Utility Service Partners, a HomeServe Company, was conceived in partnership with the National League of Cities to educate property owners about their service line responsibilities and to help residents avoid the out-of-pocket expense for unanticipated and potentially costly service line repairs and replacements. Our program, the only one of its kind endorsed by the NLC and the Iowa League of Cities and, will help the City of Newton achieve its goals by:

- Providing homeowners affordable protection against significant and unexpected costs to remedy leaking/broken/ clogged water lines, sewer lines, and in-home plumbing lines.
- Ensuring the delivery of timely, high-quality repair services in adherence to all applicable codes
- Providing exemplary service that reflects positively on the City.
- The program generates an ongoing, sustainable source of revenue for partner municipalities and stimulates the local economy by using fully vetted local contractors to complete the repairs.
- The City will receive a royalty 10% of the premiums collected.

COVERAGE: NLC Service Line Warranty Program offers three complete and separate voluntary programs. There is never a service fee/deductible or annual or lifetime limit. Residents can cancel the warranties at any time.

Exterior Water Service Line: Includes service to locate, excavate and repair/replace a leaking exterior water service line. Covered repairs include, but are not limited to leaks, breaks, corrosion, blockages, root intrusion, and other types of damage (such as from freezing) that impair or limit the intended function of the system. Includes thawing of frozen water lines. Includes restoration of ground surface features after excavation for service line repair, including filling, raking, reseeding, reinstallation of existing soft landscaping and shrubbery, and patching of paved surfaces.

Exterior Sewer Service Line: Includes services to locate, excavate and repair/replace a leaking exterior sewer service line. Covered repairs include, but are not limited to leaks, breaks, corrosion, blockages (due to fats, oils and grease), root intrusion, and other types of damage (such as from freezing) that impair or limit the intended function of the system. Includes restoration of ground surface features after excavation for service line repair, including filling, raking, reseeding, reinstallation of existing soft landscaping and shrubbery, and patching of paved surfaces.

Internal Plumbing and Drainage: Coverage includes the emergency breakdown costs of repairing or replacing interior water, sewer, and drainage pipe materials, valves and other plumbing-related material, including unblocking, repair and replacement. Repair of clogged toilets.

Product	Monthly	Annual Coverage Limit	Annual Service Calls/Per Call Coverage	Royalty for the City
External Water Line	$7.99	Unlimited	Unlimited Calls $8,500 Per Call	10% of the premiums collected
External Sewer Line	$12.99	Unlimited	Unlimited Calls $8,500 Per Call	10% of the premiums collected
In-Home Plumbing	$12.99	Unlimited	Unlimited Calls $3,000 Per Call	10% of the premiums collected

IMPLEMENTATION: The NLC Service Line Program will utilize the City logo to brand the materials used to educate City residents/customers about our repair service plans. Program marketing literature clearly discloses that the Program and the City are separate entities and that the program is voluntary for residents. The NLC Service Line Warranty Program will create all marketing materials with input from the City and will submit all marketing/communications materials to the City for final approval.

ENROLLMENT AND BILLING: The NLC Service Line Program offers residents simple options if they choose to enroll either via mail, phone, or web. We handle all customer billing and residents can choose annual, quarterly, or monthly billing and may pay by check, direct debit/ACH, or credit card. Once we receive the enrollment application, customers receive a welcome letter which includes their service agreement terms and conditions, their payment details, a reiteration of their policy coverage, and our toll-free customer service number. Customers also receive a welcome call from customer service as an additional, personalized confirmation of the program. We handle all customer billing, and a homeowner can enroll or cancel at any time.

FINANCIAL IMPACT: No cost to the City to participate and the City would receive 10% of the premiums collected, paid annually.

MARKETING AGREEMENT

This MARKETING AGREEMENT ("**Agreement**") is entered into and made effective as of _____, ("**Effective Date**"), by and between the City of Newton, Iowa ("**City**"), and Utility Service Partners Private Label, Inc. d/b/a Service Line Warranties of America ("**SLWA**," and together with City, the "**Parties**," and each, a "**Party**").

WHEREAS, individual residential property owners ("**Customer(s)**") residing in the City own and are responsible for sewer and water lines between the mainlines and the connection on their property;

WHEREAS, City desires to announce to Customers the opportunity, but not the obligation, to purchase plans as set forth in Exhibit A or as otherwise mutually agreed by the Parties in writing (including by email) ("**Plan(s)**") to repair such lines; and

WHEREAS, SLWA, a subsidiary of HomeServe USA Corp. ("**HomeServe**"), is the administrator of the National League of Cities (**"NLC"**) Service Line Warranty Program.

NOW, THEREFORE, in consideration of the foregoing recitals, and for other good and valuable consideration, the receipt and sufficiency of which is hereby acknowledged, and with the intent to be legally bound hereby, the Parties agree as follows:

1. **Purpose.** City grants to SLWA the right to offer and market service Plans subject to the terms and conditions of this Agreement.

2. **City Obligations.**

A. Grant of License. City grants to SLWA a license ("**License**") to use City's designated names, symbols, trademarks, service marks, logotypes, trade names and insignias owned by City or its affiliates (**''Marks''**), which may include the use of City's logo and name in advertising (including on SLWA's websites or social media sites), in signature lines, and in marketing materials to be sent to Customers, all at SLWA's sole cost and subject to City's prior review and approval, which will not be unreasonably conditioned, delayed, denied, or withheld. SLWA's use of the Marks in accordance with this Agreement will not infringe any other party's rights. In consideration of the payment of all fees identified in Exhibit A, and SLWA's marketing activities, City shall not advertise, promote, administer, offer, or sell, directly or indirectly, any plans that are the same as, or substantially similar to, the Plans during the Term. In the event that City extends a similar license to a competitor of SLWA during the Term, City shall provide thirty (30) days' written notice prior to such grant of license and SLWA may immediately terminate this Agreement.

B. Data.

i. If City elects to do so, City may provide SLWA with "zip code" data for Customers in an agreed-upon format. If City further elects to do so, City may also provide a list of the name, service address, postal address (if different), residential telephone number, and, if available, email address of Customers and any other appropriate or necessary data ("**Customer Data**") to SLWA, or to a third party if and as directed by SLWA in writing, for use by SLWA in furtherance of the marketing and sale of the Plans. If provided by City, Customer Data will be provided to SLWA quarterly or more frequently during the Term and in a mutually agreed electronic format. If provided by City to SLWA, Customer Data shall remain City's property and Confidential Information (defined below), and SLWA will only use Customer Data as permitted by this Agreement. SLWA may obtain Customer Data from a third-party in furtherance of the marketing and sale of the Plans. In the event SLWA obtains Customer Data from a third-party, it shall become and remain SLWA's property and Confidential Information. "**Member**" means those Customers that purchase and are successfully enrolled in a Plan by SLWA. Each Member's name, address, phone number, email address and any other information that SLWA collects from a Member, is SLWA's property and Confidential Information.

ii. Data Processing Addendum. In the event that City provides Customer Data to SLWA, the Parties shall abide by all of the requirements and obligations set forth in that certain Data Processing Addendum, which can be accessed and viewed at: https://www.homeserve.com/sc/legal/HomeServeDataPrivacyAddendum (the "**DPA**"), which is incorporated herein

by reference, for purposes of compliance with all Data Protection Laws (as defined in the DPA). In the event of any inconsistency between the provisions in this Agreement and those contained in the DPA, the DPA shall control.

3. **Term; Termination.** The term of this Agreement shall be for the number of years in Exhibit A commencing with the Effective Date ("**Initial Term**"). The Agreement will automatically renew for additional one (1) year terms, unless one of the Parties gives the other written notice at least ninety (90) days prior to the end of the then current term (each a "**Renewal Term**" and collectively with the Initial Term, the **"Term"**) that the Party does not intend to renew this Agreement. In the event that SLWA is in material breach of this Agreement, City may terminate this Agreement thirty (30) days after giving written notice to SLWA of such breach, (i) if said breach is not cured during said thirty (30) day period, or, (ii) if such breach is incapable of being cured in such period, SLWA has failed to take during such period substantive steps to cure such breach. Either Party may terminate this Agreement without cause upon thirty (30) days' prior written notice to the other Party. SLWA will be permitted to complete any marketing initiative initiated prior to termination of this Agreement after which time, neither Party will have any further obligations to the other and this Agreement will terminate.

4. **Consideration.** SLWA shall pay City a fee based on the success of the marketing efforts using the Marks subject to the License as described herein (**''License Fee''**), as set forth in Exhibit A. The first payment of the License Fee shall be due by January 30th of the year immediately following the Effective Date. Subsequent payments shall be made on an annual basis throughout the Term, due and payable on January 30th of each succeeding year.

5. **Applicable Laws.** Each Party shall comply at all times with all applicable laws, statutes, treaties, rules, codes, ordinances, regulations, permits, official guidelines, judgements, orders and interpretations, as well as licensing or registration requirements ("**Applicable Laws**") with respect to its obligations under this Agreement. For any Customer Data provided by City to SLWA, City warrants, represents and covenants that Customer Data has been and will be collected in compliance with all Applicable Laws. City is permitted by Applicable Laws and privacy policies to provide Customer Data to SLWA and to permit SLWA to use such data as contemplated by this Agreement.

6. **Confidentiality. "Confidential Information"** of a Party means any non-public, proprietary, or confidential information, whether or not it constitutes a trade secret under Applicable Laws, and any other information that a reasonable person would expect to be confidential. Each Party will treat Confidential Information received from the other Party as confidential, and such Party shall not disclose or use such information in a manner contrary to the purposes of this Agreement. Notwithstanding the foregoing, a Party shall not be liable to the other Party for any disclosure of Confidential Information that is required under any Applicable Laws, applicable public records act or under court order. To the extent legally permissible, a Party shall provide written notice to the other Party prior to any such disclosure.

7. **Ruling and/or Code Change.** In the event that: (i) a change or proposed change in Applicable Laws, or municipal or similar codes; or (ii) an interpretation, policy, ruling, or order by any court, tribunal, arbitrator, regulatory agency, commission, including a public service commission or similar body of a City, or other instrumentality of the United States, or any state, county, City, or other political subdivision; negatively or potentially negatively impacts the terms of this Agreement or the obligations of the Parties set forth in this Agreement, the Parties shall negotiate in good faith to modify the terms of this Agreement accordingly. Should the Parties be unable to reach a mutual agreement to revise this Agreement, then either Party may terminate this Agreement on thirty (30) days' written notice to the other Party.

8. **Indemnification.** Each Party (the "**Indemnifying Party**") hereby agrees to indemnify, defend and hold the other Party and its directors, managers, members, officers, employees, contractors, subcontractors, and agents, and in the case of City, also its elected officials ("**Representatives**") (collectively or individually, "**Indemnitee**") harmless from and against any and all third party claims, damages, losses, expenses, suits, actions, decrees, judgments, awards, reasonable attorneys' fees and court costs ("**Claim(s)**"), which an Indemnitee may suffer or which may be sought against or are recovered or obtainable from an Indemnitee, as a result of or arising out of any breach of this Agreement by the Indemnifying Party, or any negligent or fraudulent act, intentional misconduct, or omission of the Indemnifying Party or its Representatives in the performance of this Agreement; provided that the applicable Indemnitee notifies the Indemnifying Party of any such Claim within a time that does not prejudice the ability of the Indemnifying Party to defend against such Claim. Any Indemnitee under this Agreement may participate in its own defense, but will be responsible for all costs incurred, including reasonable attorneys' fees, in connection with such participation.

9. **Independent Contractor Status.** The obligations performed by each Party in this Agreement shall be executed as an independent contractor. SLWA shall have responsibility for and control over the details and means for providing the Plans under this Agreement. Neither Party nor any of its Representatives shall be considered an employee, representative, agent or subcontractor of the other Party or its Representatives.

10. **Anti-Bribery and Corruption.**

A. Each Party warrants to the other that:

i. it has not offered, promised, given, accepted, or agreed to give or accept, and shall not during the Term offer, promise, give, accept, or agree to give to or accept from any person any bribe on behalf of the other Party or otherwise with the object of obtaining a business advantage for the other Party or otherwise;
ii. it will not engage in any activity or practice which would constitute an offense under any applicable anti-bribery and corruption laws, including but not limited to the United States Foreign Corrupt Practices Act of 1977, the United Kingdom's Bribery Act 2010 and Canada's Corruption of Public Officials Act, and it will notify the other Party as soon as practicable of any offense of the foregoing acts in connection with this Agreement, or any breach of the undertakings contained in this section of which it becomes aware;
iii. it has in place, and during the Term will maintain, its own policies, procedures, and internal controls, including accounting procedures to record expenditures in connection with this Agreement, necessary to ensure compliance with any applicable anti-bribery and corruption laws;
iv. it will ensure that any person who performs or has performed services for or on its behalf ("**Associated Person**") complies with this section, it will not enter into an agreement with any Associated Person in connection with this Agreement unless such agreement contains terms substantially similar to those contained in this section, and it shall be responsible for any breach of such terms, or these terms, by any Associated Person that is a subcontractor of the Party hereunder;
v. from time to time during the Term, at the reasonable request of the other Party, it will confirm in writing that it has complied with the terms of this section and will provide any information reasonably requested by the other Party to demonstrate such compliance; and
vi. in the case of City, it will abide the "Reporting Hotline" section of SLWA's Business Partner Code of Conduct (described in "Business Partner Code of Conduct" section) to report to SLWA any request or demand for any improper payments or other improper advantage of any kind in connection with the performance of this Agreement.

11. **Records; Audit.** Each Party shall, at all times during the Term and for a period of seven (7) years after the termination or expiration of this Agreement, maintain complete and accurate records, together with supporting or underlying documents and materials, kept and maintained by such Party, its Representatives to substantiate such Party's compliance with its obligations and responsibilities under this Agreement. Up to once per year of the Term, each Party shall have the right, upon at least ten (10) days' prior written notice and during normal business hours, at its sole cost and expense, to audit and inspect, on its own or through a Representative, the other Party's records for the purpose of confirming such other Party's compliance with the terms of this Agreement.

12. **Notice.** Any notice required to be given under this Agreement shall be deemed to have been received when delivered (i) by personal service, (ii) by electronic mail with confirmation of delivery and receipt (provided a hard copy is sent promptly by regular mail), or (iii) by registered or certified mail, return receipt requested, with the United States Postal Service, addressed as follows:

To: City:
City of Newton
ATTN: Jody Rhone
303 W 4th St N Suite 501
Newton, IA 50208
email: jodyr@newtongov.org
Phone: (641) 791-0827

To: SLWA:
Utility Service Partners Private Label, Inc.
601 Merritt 7, 6th Floor
Norwalk, CT 06851
Attention: Michael Backus, Chief Growth Officer
email: michael.backus@homeserveusa.com
Phone: (203) 840-8276

With a copy to:
Legal Department
email: legal@homeserveusa.com

13. **Entire Agreement; No Third-Party Beneficiaries; Severability.** The Parties acknowledge that no representations, agreements, or promises were made by the other Party or by any of its Representatives other than those specifically contained in this Agreement. This Agreement, including the recitals as well as any attachments or exhibits, constitutes the entire agreement of the Parties with respect to the matters contemplated in this Agreement, and supersedes any prior agreement or understanding with respect to them. The Parties agree that this Agreement was entered into solely for the respective benefit of each of them and their respective successors and assigns, and nothing in this Agreement is intended to create any third-party beneficiaries. This Agreement may be amended or modified only by a written instrument executed by an authorized representative of each of the Parties. No term or provision hereof shall be deemed waived and no breach excused unless such waiver or consent is in writing and signed by the Party claimed to have waived or consented. Subject to Applicable Laws, the invalidity or unenforceability of a specific provision in the Agreement shall not render any other provision(s) invalid, inoperative, or unenforceable.

14. **Assignment.** Neither Party may assign or transfer any of its rights under this Agreement without the prior written consent of the other Party, which consent shall not be unreasonably delayed, withheld, conditioned, or denied, except to an affiliate of the assigning Party or an acquirer of all or substantially all of the assets of the assigning Party. Any purported assignment or delegation in violation of this section shall be null and void. No assignment or transfer of this Agreement shall relieve the assigning Party of any of its obligations under this Agreement. This Agreement shall be binding upon and shall inure to the benefit of the Parties as well as their respective successors or permitted assigns.

15. **Counterparts; Electronic Delivery.** This Agreement may be executed in counterparts delivered by email, DocuSign, or other electronic transmission; such counterparts will be deemed originals and binding upon the Parties upon receipt, regardless of whether originals are delivered thereafter. All such counterparts will constitute one and the same contract, and the signature of any Party to any counterpart will be deemed a signature to any other counterpart.

16. **Governing Law; Venue; Waiver of Jury Trial.** The Parties shall comply with all Applicable Laws with respect to their respective obligations under this Agreement. This Agreement is governed by and shall be construed in accordance with the laws of Iowa, without regard to the choice of law principles of the forum state. Any action at law, suit in equity, or other proceeding against any Party with respect to this Agreement or in connection with any of the matters contemplated by this Agreement shall be brought and maintained exclusively in the state or federal courts located in Iowa, as applicable. THE PARTIES HEREBY KNOWINGLY, VOLUNTARILY, AND INTENTIONALLY WAIVE ANY RIGHT THAT MAY EXIST TO HAVE A TRIAL BY JURY IN RESPECT OF ANY LITIGATION BASED UPON OR ARISING OUT OF, UNDER, OR IN ANY WAY CONNECTED WITH, THIS AGREEMENT.

17. **Business Partner Code of Conduct.** SLWA and City are committed to conducting their business activities with the highest standards of honesty and integrity. City acknowledges that it has received and reviewed SLWA's Business Partner Code of Conduct (available at https://www.homeserveusa.com/sc/cobc) as updated from time to time, and City agrees to abide by SLWA's Business Partner Code of Conduct as a material condition of this Agreement. Should City suspect or become aware of any actual or suspected violation of SLWA's Business Partner Code of Conduct, City shall promptly notify SLWA or its anonymous ethics hotline (*see* SLWA's Business Partner Code of Conduct).

IN WITNESS WHEREOF, the Parties hereto have executed this Agreement as of the Effective Date.

CITY OF NEWTON

By: _____

Name: _____

Title: _____

UTILITY SERVICE PARTNERS PRIVATE LABEL, INC.

By: _____

Name: Michael Backus

Title: Chief Growth Officer

Exhibit A

Marketing Agreement

City of Newton
Term Sheet

I. **Initial Term.** Three (3) Years, with the option for Renewal Term(s).

II. **License Fee.** Ten percent (10%) of the fees actually received from Members during the Term under any Plans sold under the Agreement, **net** of any discount, rebates, refunds, chargebacks, credits, and sales or similar taxes incurred or paid by SLWA in connection with such Plans.

III. **License Conditions.** Use of City's Marks in accordance with Section 2.A of the Agreement.

IV. **Plans; Plan Fees; Scope of Coverage.** The summary of coverage is accurate as of the Effective Date but is subject to change at SLWA's sole discretion. SLWA will offer the following rates to Customers:

A. Exterior water service line plan (initially, $ 7.99 per month)

i. Covers Customers' responsibility: From the main to the water meter or main shut-off valve inside the home.
ii. Covers thawing of frozen external water lines.
iii. Covers well service lines if applicable: From the external wall of Customers' well casing to the external foundation wall of the home.
iv. Coverage Cap: Unlimited number of calls/$8,500 per call/Unlimited annual maximum.

B. Exterior sewer/septic line plan (initially, $ 12.99 per month)

i. Covers Customers' responsibility: From the external wall of the home to the sewer main.
ii. Covers septic lines if applicable: From the external foundation wall of the home to the point of connection to the septic tank of the home.
iii. Coverage Cap: Unlimited number of calls/$8,500 per call/Unlimited annual maximum.

C. Interior plumbing and drainage plan (initially, $ 12.99 per month)

i. Covers repair or replacement of the following inside the home, for which the Customers have sole responsibility, that is damaged due to normal wear and tear:
   a. The blocked or leaking interior water supply and drainage system pipes that carry fresh or drinkable water and wastewater.
ii. Coverage Cap: Unlimited number of calls/$3,000 per call/Unlimited annual maximum.

Pricing does not include taxes. SLWA may adjust the Plan fees; provided, that, any such adjustment shall not exceed one dollar ($1.00) per month per Plan in any twelve (12) month period. If such adjustment shall exceed one dollar ($1.00), both Parties must agree in writing.

V. **Marketing Campaigns.** SLWA shall have the right to conduct up to six (6) campaigns per year through such channels as may be mutually agreed by the Parties.

City of Newton Council Report

Item:
Resolution authorizing the Newton Fire Department to accept the 2023 assistance to firefighters grant award in the amount of $ 77,076.48

Report Number: 2024-735
Date:
August 5, 2024
Lead Department:
Fire
Recommendation:
Approve

Summary:
Resolution authorizing acceptance of an AFG grant in the amount of $77,076.48 for the purchase of an upgrade to our Plymovent Exhaust Removal System, NFPA 1001 Training Resources, and Upgrades to Audio/Visual Equipment for our Training Room.

Financial Impact:
Local match of 5%, $3,703.82, from the FY25 Fire Department Budget.

Background:
The primary goal of the Assistance to Firefighters Grant (AFG) is to meet the firefighting and emergency response needs of fire departments and nonaffiliated emergency medical service organizations. Since 2001, AFG has helped firefighters and other first responders to obtain critically needed equipment, protective gear, emergency vehicles, training and other resources needed to protect the public and emergency personnel from fire and related hazards (FEMA, 2017). The Newton Fire Department has a great track record in applying for and receiving funds from this program as shown by the table below:

This program has funded projects like the automatic fire sprinkler system, new turnout gear, new self-contained breathing apparatus, a vehicle exhaust extraction system, and much more.

The current award is for the purchase an upgrade to our Pymovent Exhaust Removal System, NFPA 1001 Training Resources, and Upgrades to Audio/Visual Equipment for our Training Room.

The Fire Department is seeking City Council approval to accept the 2023 AFG Grant.

Recommendation:
City Staff recommends to approve the resolution authorizing the Newton Fire Department to accept the 2023 AFG grant award in the amount of $77,076.48. The 5% local match of $3,703.82 will be paid from the FY25 Fire Department Budget.

Matt Muckler, City Administrator

RESOLUTION NO. 2024 – _____

RESOLUTION AUTHORIZING THE NEWTON FIRE DEPARTMENT TO ACCEPT THE 2023 ASSISTANCE TO FIREFIGHTERS GRANT AWARD IN THE AMOUNT OF $ 77,076.48.

WHEREAS, the Federal Emergency Management Agency (FEMA) administers the Assistance to Firefighters Grant Program (AFG); and

WHEREAS, the purpose of the program is to award one-year grants directly to fire departments to enhance their abilities to respond to emergencies; and

WHEREAS, the program seeks to identify departments that lack resources necessary to protect the health and safety of the public and their firefighting personnel; and

WHEREAS, on July 25, 2024 the fire department received a 2023 AFG grant award in the amount of $77,076.48 to purchase an upgrade to our Pymovent Exhaust Removal System, NFPA 1001 Training Resources, and Upgrades to Audio/Visual Equipment for our Training Room; and

WHEREAS, the 2023 AFG includes a federal grant in the amount of $ 77,076.48; and requires a 5% local cost match for applications. Total local cost match for the grant shall not exceed $ 3,703.82.

NOW, THEREFORE, BE IT RESOLVED by the City Council of the City of Newton, Iowa that the City accept the AFG award of $ 77,076,48, and

BE IT FURTHER RESOLVED, the $3,703.82 local match required funds used for the purchase be allocated from the FY25 Fire Department Budget for a total project cost of $ 77,076.48.

PASSED this 5th day of August, 2024.

APPROVED this _____ day of August, 2024.

_____
Evelyn George, Mayor

ATTEST:

_____
Katrina Davis, City Clerk

City of Newton Council Report

Item:
Resolution Authorizing The City Of Newton To Respond To A Request For Proposal From Pyrotechnics Guild International, Inc. (PGI) To Host The 2025 PGI Convention On Property Owned By The City And A Private Landowner

Report Number: 2024-749
Date:
August 5, 2024
Lead Department:
Community Development
Recommendation:
Approve

Summary:
The City of Newton has been invited to respond to a Request for Proposal from Pyrotechnics Guild International (PGI) to host the 2025 PGI Convention in Newton and is seeking Council approval to submit the response.

Financial Impact:
None for submitting the response to the Request for Proposal.

Background:
Pyrotechnics Guild International, Inc. (PGI) has operated as the trade organization for the general pyrotechnics industry for over 50 years and has annually invited PGI members to participate in a weeklong summertime Convention. The Convention is held in host cities with adequate venues for the workshops, manufacturing, and product demonstrations promoted by PGI, along with large fireworks display shows for which the general public is invited.

A representative of the City of Newton was approached by PGI officials recently about the possibility for the City to host the 2025 PGI Convention. A dialogue ensued, which resulted in the PGI officials visiting the proposed convention site in Newton, which would encompass Woodland Park, the softball fields north of Woodland Park and privately-owned parcels north of North 19th Avenue.

The PGI board has invited the City of Newton to respond to PGI's Request for Proposal (RFP) to host the 2025 Convention. The official response to the RFP is due to the PGI board no later than August 9, 2024. The PGI Newton Steering Committee feels confident that our proposal and venue will be accepted and that Newton will be named to host the 2025 PGI convention.

Recommendation:
Staff recommends approval of the Resolution authorizing the City of Newton to respond to PGI's Request for Proposal, on or before August 9, 2024.

Matt Muckler, City Administrator

RESOLUTION NO. 2024 – _____

RESOLUTION AUTHORIZING THE CITY OF NEWTON TO RESPOND TO A REQUEST FOR PROPOSAL FROM PYROTECHNICS GUILD INTERNATIONAL, INC. (PGI) TO HOST THE 2025 PGI CONVENTION ON PROPERTY OWNED BY THE CITY AND A PRIVATE LANDOWNER

WHEREAS, the Pyrotechnics Guild International, Inc. (PGI) has promoted the safe and responsible manufacturing and use of fireworks for over 50 years, and

WHEREAS, PGI invites their individual and corporate members to participate in an annual week-long convention at a selected host city every summer, and

WHEREAS, the convention is designed to provide educational and product demonstration opportunities for members, as well as two or three scheduled pyrotechnic events that the general public may attend, and

WHEREAS, the PGI convention held at Iowa Speedway in August of 2022 generated an estimated economic impact of between $2 million and $3 million on Newton and Jasper County, and

WHEREAS, PGI officials contacted representatives of the City of Newton to inquire about the city hosting a convention in the summer of 2025 and have come to Newton to discuss details and inspect the proposed properties, owned by the City and a private landowner, and

WHEREAS, the PGI officials have determined that the proposed property in Newton will be a suitable facility and have presented City of Newton representatives with a Request for Proposal to host the 2025 event, and

WHEREAS, Newton Parks officials and the private landowner have been consulted about the 2025 PGI convention and have given their conditional approval for the events, workshops and product demonstrations to be held on their properties, and

WHEREAS, the City's response to PGI's Request for Proposal must be received by PGI no later than August 9, 2024 to be entered into a competitive consideration;

NOW, THEREFORE, BE IT RESOLVED by the City Council of Newton, Iowa that the City of Newton has been authorized to respond to the PGI Request for Proposal in a timely manner, ensuring that the City will receive full consideration.

PASSED this 5th day of August, 2024.

APPROVED this _____ day of August, 2024.

_____
Evelyn George, Mayor

(SEAL)

ATTEST:

_____
Katrina Davis, City Clerk

City of Newton Council Report

Item:
Resolution approving Change Order #3 for the Arbor Estates 2nd Addition Public Improvements Project

Report Number: 2024-736

Date:
August 5, 2024

Lead Department:
Public Works

Recommendation:
Approve

Summary:
Approval of a change order related to the addition of twelve additional water services for Arbor Estates 2nd Addition.

Financial Impact:
$57,425.84 from 2024 bond proceeds.

Background:
The City, in partnership with the Newton Housing Development Corporation (NHDC), has been working to increase residential subdivision development in northeast Newton. With sales of the platted lots in the Arbor Estates Plat One subdivision, a new platted area in the remaining and adjacent NHDC property was needed.

On September 18, 2023, Council awarded a contract to McAninch Corp. for the Arbor Estates 2nd Addition Public Improvements in the amount of $2,689,109.12

Twelve lots on N 10th Ave E were originally to be constructed as single-family homes, but in June of 2023, during the final stages of project design, the decision was made to have the lots built to accommodate duplexes. City code requires that for multiple occupancy buildings, such as the proposed duplexes, each unit shall be considered a separate Utility customer and shall be metered and billed separately. They shall also each have their own individual outside stop box. To ensure the project continued on its current schedule, the construction documents were not updated, but rather, the additional work would be addressed during construction.

Change order #3 is for all work to install one additional water service for the twelve N 10th Ave E lots. The estimated cost, as prepared by Bolton & Menk, is $40,100.00. The proposal from McAninch, Corp, which includes an additional 85 SY of necessary pavement removal and replacement, is $57,425.84

The extra cost for the change order will be paid for using 2024 bond proceeds.

Recommendation:
City Staff recommends that Council approve Change Order No. 3 with McAninch Corp. of Des Moines, Iowa, in the amount of $57,425.84.

Matt Muckler, City Administrator

RESOLUTION NO. 2024 – _____

RESOLUTION APPROVING CHANGE ORDER NO. 3 FOR THE ARBOR ESTATES 2ND ADDITION PUBLIC IMPROVEMENTS PROJECT

WHEREAS, the City, in partnership with the Newton Housing Development Corporation (NHDC), has been working to increase residential subdivision development in northeast Newton; and

WHEREAS, On September 18, 2023, Council awarded a contract to McAninch Corp. for the Arbor Estates 2nd Addition Public Improvements in the amount of $2,689,109.12; and

WHEREAS, twelve lots on N 10th Ave E were originally to be constructed as single-family homes, but in June of 2023, during the final stages of project design, the decision was made to have the lots built to accommodate duplexes; and

WHEREAS, city code requires that for multiple occupancy buildings, such as the proposed duplexes, each unit shall be considered a separate Utility customer and shall be metered and billed separately. To ensure the project continued on its current schedule, the construction documents were not updated, but rather, the additional work would be addressed during construction; and

WHEREAS, this change order is for the necessary work to install one additional water service for the twelve N 10th Ave E lots; and

WHEREAS, City Staff recommends that Council approve Change Order No. 3 with McAninch Corp. of Des Moines, Iowa, in the amount of $57,425.84.

NOW, THEREFORE, BE IT RESOLVED, by the City Council of Newton, Iowa, that Change Order No. 3 for the Arbor Estates 2nd Addition Public Improvements Project with McAninch Corp. of Des Moines, Iowa, in the amount of $57,425.84 is approved.

BE IT FURTHER RESOLVED, by the City Council of the City of Newton, Iowa, that Change Order No. 3 for the Arbor Estates 2nd Addition Public Improvements Project as described by the plans and specifications filed in the office of the City Clerk, said change order to be signed by the Mayor on behalf of the City.

BE IT FURTHER RESOLVED, by the City Council of the City of Newton, Iowa, that the $57,425.84 cost for said change order will be paid using 2024 bond proceeds.

PASSED this _____ day of August, 2024.

APPROVED this ____ day of August, 2024.

_____
Evelyn George, Mayor

ATTEST:

_____
Katrina Davis, City Clerk